Georg Fischer Waga N.V.

+GF+

Product Catalogue

THE ORIGINAL · DAS ORIGINAL · EL ORIGINAL · HET ORIGINEEL · MULTI/JOINT ®

Georg Fischer Waga N.V.

Georg Fischer Waga N.V. was founded in 1957 and has the main focus on the development, production and sales of high quality connection techniques. For many years now, our products are successfully used around the world in under and above ground water and gas applications for new construction, expansion and maintenance & repair.

Table of contents

	page
Water & gas	4
Meet the vips	6
Around the world	8
The right choice	10
MULTI/JOINT® The original!	12
Technical information	13
Terms and definitions	14
Pipe outside diameters	15
Pipe chart imperial	16
Material specifications	18
Coatings	20
Technical specification flanges	23
Insert stiffeners	25
MULTI/JOINT® 3000 Plus principle	27
Multi/Clamp length selection	30
User manuals	31
MULTI/JOINT® 3000 Plus DN50 - DN400	32
MULTI/JOINT® 3000 Plus DN425 - DN600	47
MULTI/JOINT® 3000 Plus DN625 - DN825	62
ST-System	76
Multi/Clamp	83
Insert Stiffeners	90
Tender specifications	95
MULTI/JOINT® 3000 Plus	96
ST-System	101
Multi/Clamp	102
Product range	105
Index	200
Conditions of sale	213

The technical data are not binding and not expressly warranted characteristics of the goods. They are subject to change. Please consult our general conditions of supply.

For more information visit our website:

Water & gas

Maintenance & repair

Maintenance and repair in under and above ground piping systems for water and gas requires no special efforts with the products from the Georg Fischer Waga N.V. program. We offer a wide range of products, which can be used for transport lines, distribution lines, house connections and service lines.

We offer various solutions for a variety of maintenance and repair work. Whether the job is to connect, repair or drill, we have the right product. Quality and simplicity are always the most important characteristics of our products. With our reliable fittings it is easy to make a maintenance free and long lasting connection. That is the strength of all our products and an absolute must for the users in the water and gas market!

Transport lines

Transport lines carry water and gas from the source to the distribution lines. Distribution lines distribute the water or gas towards the end user. Transport lines, usually with large diameters, are repaired with large diameter fittings. Especially for these large diameter transport lines we developed products that can easily be used to connect and repair these pipelines from DN300 up to DN2200.

Distribution lines

Distribution lines ensure water and gas distribution to the end user. Through large diameter transport lines, via distribution and service lines, water or gas reaches the end user. Whether it concerns new construction or maintenance and repair applications, with products from the Georg Fischer Waga N.V. program distribution lines from DN50 up to DN400 can perfectly be installed.

House connections and service lines

The last stage of the distribution grid is through pipelines that supply water or gas to the meter. These pipelines are commonly known as house connections and service lines. Through these pipe lines, with sizes of up to and including DN50, the water and gas is brought into houses or buildings. We have developed products for connections to these smaller diameter pipe lines, such as saddles and drilling devices.

Meet the VIPS

Our solutions

With all of our products we put quality and simplicity first. With our reliable fittings a quick, easy and maintenance free connection can be made that will last for a long time. That is the strength of all our products and for the water and gas market an absolute need!

+Wide range restraint fittings

MULTI/JOINT® 3000 Plus

DN50 - DN400

DN425 - DN600

DN625 - DN825

+Dedicated fittings

ST-System

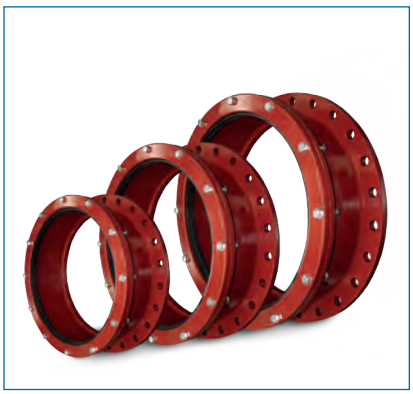

UNI-Coupling

+Repair clamps & tapping saddles

Multi/Clamp

+Drilling devices

W400 / W410

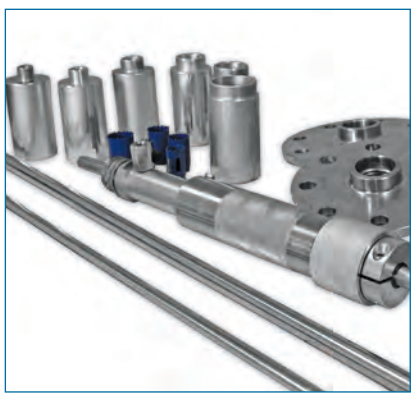

Around the world

Our reference cases

Whether it is connecting, repairing or tapping, our products can be used in a variety of applications. Our product programs are succesfully implemented in the water and gas market in various applications around the world.

A selection of MULTI/JOINT® reference cases:

How the MULTI/JOINT® Became a Piece of Art

Amsterdam, The Netherlands

Imagine being the manager of the Stedelijk Museum in Amsterdam, a large and popular art museum in the Netherlands. Just like any other day, you are in control and making sure everything goes well. Of course, that is until you are faced with a potentially disastrous leakage...

READ MORE

MULTI/JOINT® a Solid Bet for Philippines' Okada Manila Integrated Resort

Parañaque, Philippines

In February 2017, the casino resort and hotel complex Okada Manila, officially opened its doors. Japanese business man Kazuo Okada, who earned a big part of his fortune with the Japanese Pachinko machines, obtained a license back in 2008 to run a casino in the Manila Entertainment City. This prestigious gambling facility should compete with casinos in Macau and should turn Manila into a regional and international gambling destination.

READ MORE

Giant Sinkhole Swallows Cars

Florence, Italy

Around noon, all of a sudden, a large part of the embankment collapsed and came crashing down a number of meters. A leaking cast iron water pipe DN600 washed away a massive amount of soil, causing a giant hole with a swirling water mass, which swallowed the parked cars and caused an enormous mess.

READ MORE

The right choice

Which product do you need?

Our products can be used for various applications. Therefore we would like to help you make the right choice. In the below shown flow chart you can see which product is suitable for your application.

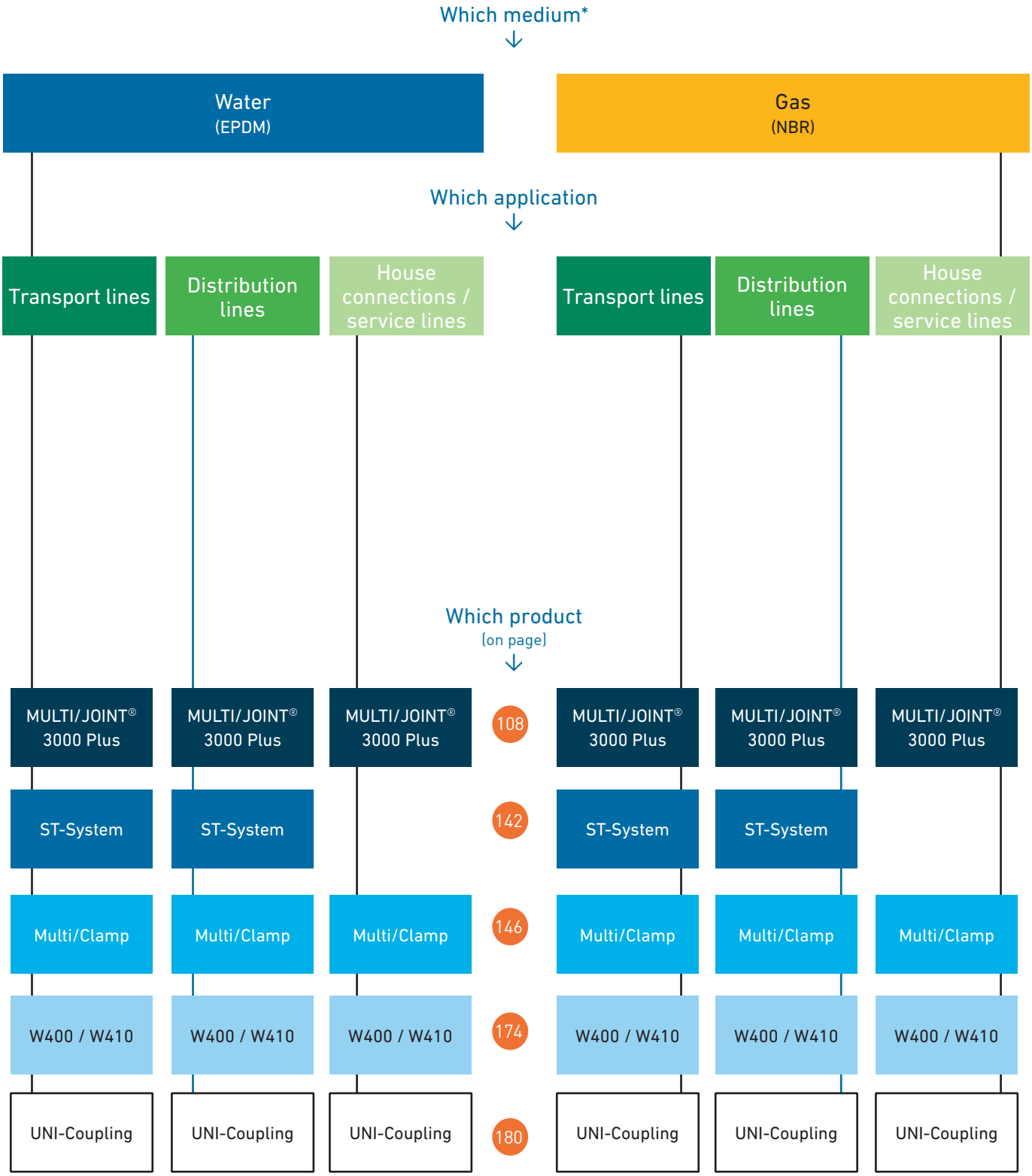

*** For other fluids than water and gas, please contact your supplier.**

MULTI/JOINT® The original!

Perfection in every detail MULTI/JOINT® 3000 Plus

Clamp ring:
ductile cast iron GGG45 EN-GJS-450-10
with Resicoat® epoxy powder coating
type RT 9000 R4

Uni/Fiks ring

Uni/Fikser:
stainless steel A4 (AISI 316)

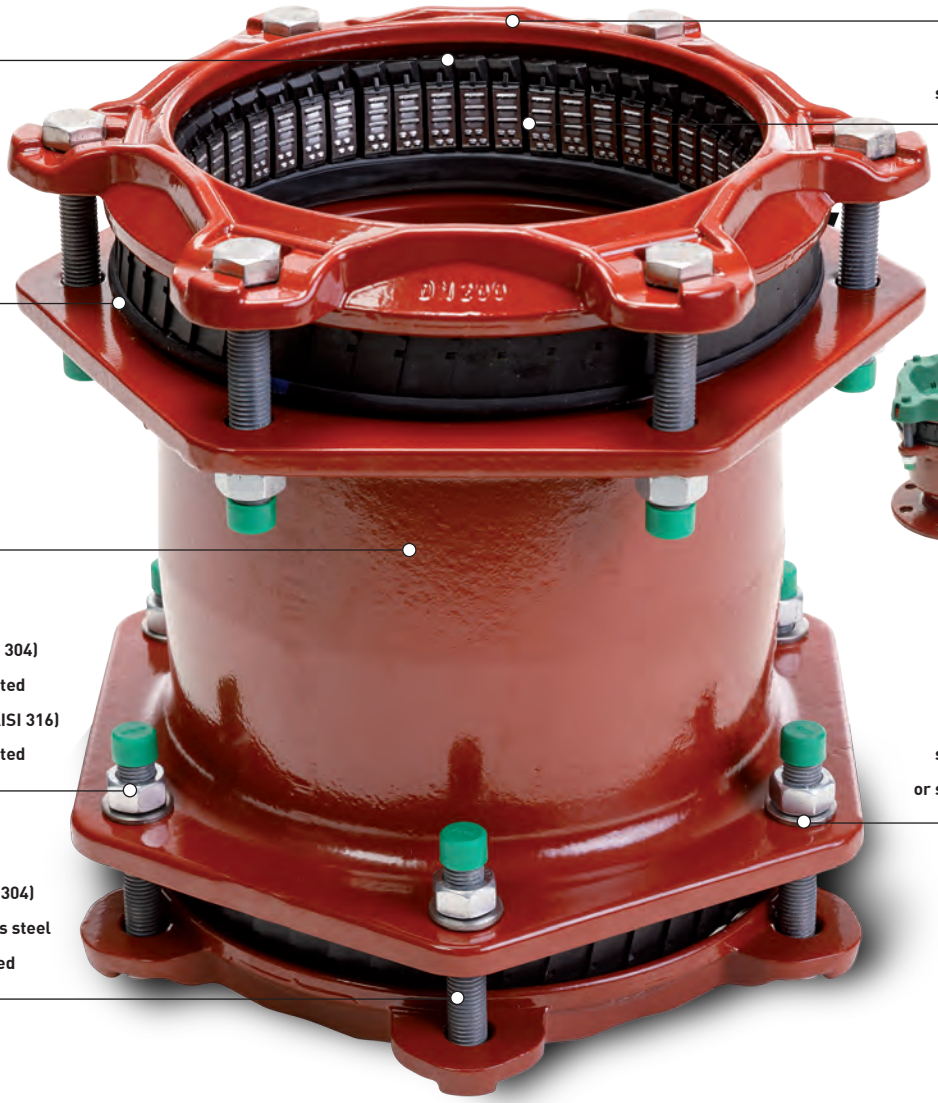

Varioseal:
rubber gasket
(EPDM or NBR)

Hygiene protection:
Ensures the fitting stays
clean from production
to point of use

(cap in the
picture:
DN50 -
DN400)

Body:
ductile cast iron
GGG45 EN-GJS-450-10
with Resicoat® epoxy
powder coating
type RT 9000 R4

Nuts:
stainless steel A2 (AISI 304)
galvanised and passivated
or stainless steel A4 (AISI 316)
galvanised and passivated

Washer:
stainless steel A2 (AISI 304)
or stainless steel A4 (AISI 316)

Bolts:
stainless steel A2 (AISI 304)
Lubo coated or stainless steel
A4 (AISI 316) Lubo coated

Technical information

Terms and definitions

Terms and definitions used throughout this technical manual comply (as much as possible) with the latest terms and definitions used in the European standards.

Allowable operating pressure (PFA)
Internal pressure, exclusive of surge that a component can safely withstand in permanent service (see EN 805), often referred to as working pressure.

Allowable test pressure (PEA)
Maximum hydrostatic pressure that a newly installed component can withstand for a relatively short duration, when either fixed above ground level or laid and backfilled underground in order to measure the integrity and tightness of the pipeline (see EN 805), often referred to as test pressure. **Note:** This test pressure is different from the system test pressure (STP), which is related to the design pressure of the pipeline, and is intended to ensure the integrity and leak tightness of a certain installed fitting.

Nominal pressure (PN)
Numerical designation expressed by a number, which is used for reference purposes.

Nominal size (DN diameter nominal)
Numerical designation of size, which is common to all components in a piping system. It is a convenient round number for reference purposes and is only loosely related to manufacturing dimensions (see EN ISO 6708).

Outside diameter (OD)
Outside diameter of the pipe(s) to be connected.

Depth of engagement
Minimum distance between any point of the spigot end and the internal face of the joint gasket.

Ductile cast iron
Cast iron used for pipes, fittings and accessories in which graphite is present, mainly in spheroidal form.

Fitting
Casting other than a pipe, which allows pipeline deviation, change of direction or bore. In addition flanged socket pieces, flanged spigot pieces and collars are also classified as fittings.

Flange
Flat circular end of a fitting or pipe extending perpendicular to its axis, with bolt holes equally spaced in a circle.

Gasket
Sealing component of a joint.

Joint
Connection between the ends of two pipes and/or fittings in which a gasket is used to effect a seal.

Joint angular deflection
Angle between the axis of two connected pipe components, which a flexible joint can accommodate.

Joint gap
Maximum axial distance between any point of the spigot ends of the pipes to be connected (coupling), or, maximum axial distance between any point of the spigot end of the pipe and the flange face (flange adaptor).

Wide range coupling
Fitting intended for use with pipes of various materials which:
- is used in a pipeline to make the connection between two spigots of pipes, fittings or valves
- allows for radial and axial displacements in order to facilitate easy assembly.

Wide range flange adaptor
Fitting intended for use with pipes of various materials which:
- is used in a pipeline to make the connection with a spigot of a pipe or a fitting and the flange of another component of the pipeline (e.g. pipe, fitting, valve)
- allows for radial and axial displacements in order to facilitate easy assembly.

Wide range stepped or reducer coupling
Large tolerance coupling intended for use with pipe components of different nominal sizes.

Performance test
Proof of design test, which is done once and is repeated only after changing the design.

Restraint flexible joint
Flexible joint in which a means is provided to prevent separation of the assembled joint.

Dimensions and units
All dimensions used in this catalogue or other documentation are indicated in mm and/or inches and are specified as nominal or standard sizes. We reserve the right to alter design of fittings.

Pipe outside diameters

Coupling DN	Steel imp.	Steel metric	PVC/PE metric	PVC/PE imp.	Ductile iron cl. 18	Grey cast iron Brit.	AC cl 6/12
50	60.3	60.3/66	63	60.3	66	68	-
65	76.1	76.1	75	76.1	82	-	-
80	88.9	88.9	90	88.9	98	95	124
100	114.3	108	110/125	114.3	118	122	149/151
125	139.7	133	140	139.7	144	148	174
150	168.3	159	160/180	168.3	170	174	228
200	219.1	211/216	225	219.1	222	228	-
225	244.5	241	250	244.5	248	257	268/280
250	273	267	280	273	274	284	334
300	323.9	316/318	315/355	323.9	326	337	-
350	355.6	368	355	355.6	378	-	-
400	406.4	419	400	406.4	429	-	-
425	457	-	450	457	-	442	-
450	457	464/470	450	457	480	-	-
475	508	-	500	508	-	495	-
500	508	514/521	500	508	532	-	-
550	559	559	560	-	558	548	550
600	609.6	622	630	609.6	635	-	-
625	660	-	630	660	635	650	638
675	-	-	-	-	-	667	-
700	711	-	710	711	738	703/720/729	-
800	813	-	800	813	-	807/826	-
825	864	-	-	-	842	860	850

Coupling DN	AC cl. 10	AC cl. 10 rough approx.	AC cl. 12	AC cl. 12 rough approx.	AC cl. 18	AC cl. 24
50	68	-	-	-	-	-
65	-	72	74	78	-	86
80	98	102	-	-	86	-
100	120	124	104/124	108/128	106/126	106/126
125	145	149	149	153	153	-
150	176	180	180	184	178	157/184
200	-	-	-	-	-	-
225	232	236	238	242	234	244
250	284	288	292	296	288	296
300	340	346	350	356	344	354
350	-	-	-	356	344	354
400	-	402	410	416	402	414
425	452	460	-	-	456	-
450	452	460	468	476	456	468
475	510	-	-	-	508	-
500	510	518	522	530	508	522
550	568	576	580	-	564	578
600	-	-	-	-	-	-
625	-	-	651	-	-	-
675	-	-	-	-	668	691
700	-	-	-	-	-	-
800	-	-	-	-	-	-
825	-	-	868	-	-	-

Pipe chart imperial

Georg Fischer pipe and fittings O.D. chart

MULTI/JOINT®

www.waga.nl

+GF+

Nominal size		MULTI/JOINT®		Steel size			Ductile size			Cast size	Sewer pipe	Asbestos cement size					
Inch	mm	Range (inch)	Range (mm)	Std steel	IPS PVC	IPS PE	Ductile iron	C900 C909 PVC	DIPS PE	Cast iron	SDR35	A/C ME Class 100	A/C ME Class 150	A/C ME Class 200	A/C RB Class 100	A/C RB Class 150	A/C RB Class 200
2	50	1.811-2.795	46-71	2.38													
2 ½	65	2.480-3.543	63-90	2.88													
3	80	3.307-4.133	84-105	3.50			3.96			3.96		3.74	3.84		4.00	4.10	4.29
4	100	4.094-5.196	104-132	4.50			4.80			5.00	4.22	4.64	4.81		4.79-5.26	4.97-5.32	5.22-5.57
5	125	5.196-6.102	132-155	5.56													
6	150	6.062-7.559	154-192	6.63			6.90			7.10	6.28	6.91			7.05-7.40	7.07-7.37	7.26-7.60
8	200	7.559-9.133	192-232	8.63			9.05			9.30	8.40	9.11			9.22-9.57	9.27-9.62	9.39-9.79
9	225	9.050-10.551	230-268														
10	250	10.500-12.204	267-310	10.75			11.10			11.40	10.50	11.24	11.66		11.25 - 11.77	11.82 - 12.12	11.77 - 12.12
12	300	12.401-14.015	315-356	12.75			13.20			13.50	12.50	13.44	13.92		13.37 - 14.04	14.08 - 14.38	14.03 - 14.38
14	350	13.858-15.472	352-393	14.00			15.30			15.65		15.07	16.22		15.36 - 15.80	16.38 - 16.73	16.44 - 16.88
16	400	15.433-17.047	392-433	16.00			17.40			17.80		17.15	18.46		17.50 - 17.94	18.62 - 18.97	18.74 - 19.19
17	425	17.000-18.267	432-464														
18	450	17.716-18.976	450-482	18.00			19.50			19.92	18.70	19.90	20.94	22.18	20.44	21.20	
19	475	18.937-20.196	481-513														
20	500	19.685-20.944	500-532	20.00			21.60			22.06		22.12	23.28	24.66	22.50	23.54	
22	550	21.574-22.834	548-580														
24	600	23.818-25.078	605-637	24.00			25.80			26.32	24.80	26.48	27.96	29.62	27.17	28.22	
25	625	24.803-26.063	630-662														
27	675	26.181-27.441	665-697														
28	700	27.913-29.173	709-741														
30	750	29.331-30.591	745-777	30.00			32.00			32.40 (C) 32.74 (D)	32.00	33.12	35.00	37.06			
32	800	31.456-32.740	799-831														
33	825	32.952-34.212	837-869														

Please note that actual pipe outside diameters can vary. Please verify the exact pipe O.D. before ordering fittings. The fittings are also suitable for pipe materials that are not listed. Please contact us for more information.
MULTI/JOINT® restraint version for water applications: 2" - 16" = wp 232 psi*, 17" - 33" = wp 150 psi
* 14" and 16" 150 psi for plastic pipes

Georg Fischer Waga N.V.
P.O. Box 290 - 8160 AG - EPE - The Netherlands
T +31 578 678378 - F +31 578 620848
waga.ps@georgfischer.com

Suitable for all materials

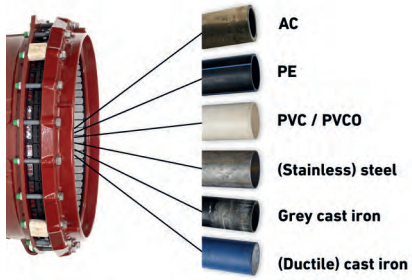

Installation Torque

MULTI/JOINT® size: DN	Inch	Nm	ft-lbf
50	2"	30	20
65	2,5"	40	30
80	3"	60	45
100-125	4-5"	100	75
150-200	6-8"	120	90
225-600	9-24"	140	100
625-825	25" - 33"	140 (non metal) 200 (metal)	100 (non metal) 150 (metal)

A connection between an old and a new pipe. These pipes have various outside diameters. MULTI/JOINT® 3000 Plus which 'fits and grips all' turned out to be the perfect solution.

Material specifications

Ductile cast iron

Conforming to EN-GJS-450-10 HB200 (GGG 45). General description: cast iron (used for pipes, fittings and accessories) in which graphite is present mainly in spheroidal form.

MULTI/JOINT®

Mechanical properties GGG45	**EN 1563: 2018**
Symbol	EN-GJS-450-10 HB 200
Tensile strength R_m	min. 450 N/mm²
0,2% Proof Stress $R_{p0,2}$	min. 310 N/mm²
Elongation at break	min. 10%
Modulus at elasticity	169 GN/mm2
Predominant structure	Ferrite

Steel 37-2, ASTM A108

Conforming to DIN 1.0112, BS 970 080A17. General description: medium low-carbon steel with a good weldability and slightly better machine-ability.

Mechanical properties	**ISO R 1038**
Hardness, Brinell	126
Tensile strength, ultimate	140 N/mm²
Tensile strength yield	370 N/mm²
Elongation at break	15% in 50 mm
Modulus of elasticity	205 GPa typical for steel

Stainless steel AISI 304, A2 quality X 5CrNi 189

Conforming to DIN 1.4301, ISO 683/13 11. General description: austenitic CR-Ni stainless steel. High ductility, excellent drawing, forming and spinning properties. Essentially non-magnetic, becomes slightly magnetic when cold worked. Chemical resistance: resists most oxidizing acids and salt spray. Low carbon content means less carbide precipiation in the heat-affected zone during welding and a lower susceptibility to intergranular corrosion.

Thermal properties

CTE, linear	17.3 µm/m- °C
20 °C	from 0-100 °C
Modulus of elasticity	193-200 GPa

Mechanical properties AISI 304

Hardness, Brinell	123 converted from Rockwell B hardness
Tensile strength, ultimate	565 N/mm²
Tensile strength yield	310 N/mm²
Elongation at break	70% in 50 mm

Stainless steel AISI 316, A4 quality X 5CrNiMo 17122

Conforming to DIN 1.4401, ISO 6931. General description: molybdenum content increases resistance to marine environments. High creep strength at elevated temperatures and good heat resistance Biocompatible. Fabrication characteristics are similar to types 304.

Thermal properties

CTE, linear	17.3 µm/m- °C
20 °C	from 0-100 °C

Mechanical properties AISI 316

Hardness, Brinell	190
Tensile strength, ultimate	620 N/mm²
Tensile strength yield	415 N/mm²
Elongation at break	45% in 50 mm
Modulus at elasticity	205 GPa

Rubber

Rubbers are available in many shapes and qualities. Rubbers are an essential component of fittings and valves in pipeline constructions. Depending on the transported media and temperature, a choice has to be made for a sealing material. All the different materials have their own specific quality and applications.

The basic understandings

There still exists some confusion regarding the material rubber and the methods by which products are manufactured of it. Natural or synthetic rubber is combined with several chemicals through mixing and rolling, resulting in the socalled non vulcanised rubber mixture. The added chemicals are often more important than the rubber raw material, for characteristics of the final product. Such a rubber mixture, a viscous, plastic

mass, will be processed further into the required product, by a variety of methods. To form the product to its final shape, moulds are required to shape the material either by transfer moulding machines or compression presses. The rubber mixture is introduced in the mould under pressure, at a temperature of about 150 °C, resulting in a chemical reaction, which transforms the mixture into a formed, elastic product. One should be fully aware of the required quality standard, in order to decide on the compound to be used.

NBR

Nitrile Butadiene Rubber. Rubber seals should conform to certain requirements, such as:

NEN 5601	Hardness with shore A
NEN-ISO 37	Determination tension and stress properties
NEN-ISO 48	Hardness with 1 RHD
NEN-ISO 188	Tests for accelerated ageing
NEN-ISO 815	Determination of permanent deformation
NEN-ISO 816	Determination of abrasion strength
NEN-ISO 1431	Determination of ozone resistance
EN-ISO 1817	Determination of resistance against fluids
NEN-ISO 2285	Determination of permanent stretch at temperature

NBR rubber is eminently resistant against gas, oil, grease, petrol and solvents. The resistance is strongly dependent on the Acrylonitril percentage; the best results are achieved with high percentages. However the elasticity, the resistance against permanent transformation and the low temperature resistance will decrease. The material is sensitive to corrosion by ozone. At lower temperatures, NBR will stiffen. Depending on the mixture, the maximum temperature for use can be up to around 90 °C. By complete immersion in for example oil, NBR can be used up to around 120 °C. NBR is also suitable for use in drinking and waste water systems. All NBR seals used by Georg Fischer Waga N.V. meet the requirements of EN 682 GB for gas applications, and are suitable for use in drinking water systems.

Application NBR	**Gas-, drinking- and waste water systems**
Temperature	-5 °C to +50 °C
Hardness	60 to 70 IRHD

EPDM

Ethylene-propylene-diene-monomer rubber. By copolymerisation of ethane and propane, an elastomer arises without double bindings, that can only be vulcanised with peroxides. If with polymerisation a third monomer is built in, the elastomer can be vulcanised with sulphur (EPDM). EPDM is very well resistant against weather influences in general and ozone especially. Besides that, the material is excellently resistant against high temperatures, hardly sensitive to corrosion, and resistant against free-basing, acid and solvents. Depending on the mixture and type of vulcanisation, the maximum temperature for use of EPDM is around 120 °C. All EPDM seals used by Georg Fischer Waga N.V. meet the requirements of EN 681-1/ WA.

Application EPDM	**Drinking water**
Temperature	0 °C to +50 °C
Hardness	70 IRHD

Perbunan

All Perbunan seals used by Georg Fischer Waga N.V. meet the requirements of EN 682 for gas applications and are suitable for use in drinking water systems.

Application Perbunan	**Gas-, drinking- and**
Temperature	-30 °C to +100 °C
Hardness	approx. 60 shore A

Guidance on storage of rubber seals

In case there is any doubt about the suitability of the rubber sealing for certain applications, please contact us. The rubber seals should:

- have a storage temperature below 25 °C and preferably below 15 °C,
- be protected from light, in particular strong sunlight and artificial light with a high UV content,
- not be stored in a room with any equipment capable of generating ozone, e.g. Mercury vapour lamps, high voltage electrical equipment, which may give rise to electrical sparks or silent electrical discharges,
- be stored in a relaxed condition free from tension, compression or other deformation,
- be maintained in a clean condition.

Coatings

Coating for corrosion protection
To ensure a durable, high quality corrosion protection of castings (and other metals), coatings must be resistant to temperature changes and the effects of weather and other environmental influences such as moisture, industrial gases etc., which stress the casting. The coating must ensure a completely sealed surface without porous areas. A protective coating prevents corrosion and the formation of corrosion products which, when carried along the pipeline, could lead to disruption at other points. A smooth surface reduces friction between the transported medium and the fitting. Encrustation by salts or organic materials is avoided.

Epoxy coatings
Coatings on the basis of epoxy resin are the best way of protecting castings. Epoxy powder coatings offer long-term reliability. The coating protects the entire surface area, with a film thickness of minimum 250 µm. It has no pinholes, tested with 3 kV. The epoxy resin technology uses less energy compared to other coating processes, as the parts are only heated up to approximately 200 °C. The application processes of epoxy coatings, Fluidised Bed Coating or Electro static Spray Application, allow automatic manufacturing processes and result in a homogeneous layer thickness inside and outside of the fittings, formed by one material without discontinuity. Consequently it offers excellent edge coverage. We were one of the first coupling manufacturers who started to have their product protected with an epoxy coating ever. Since we introduced the epoxy coated couplings in the beginning of 1987, we have built up a lot of experience and know-how. Within the European Standard work groups, the tendency is very clearly towards epoxy coatings instead of other coatings. As a member of GSK, Georg Fischer Waga N.V. contributes to lifting the standards for epoxy coating used in the (utility) market.

Resicoat® RT 9000 R4 (red)
Resicoat® has a very high durability. It shows very high impact resistance and offers a good electrical insulation. Values measured on blast cleaned cast iron.

Resicoat®	Technical data
Minimum thickness	250 µm according to GSK
Colour	Ruby Red, RAL 3011
Basis	Epoxy resin
Impact resistant	20 joule at 23 °C according to DIN 30671
Porosity	0 (zero) 3 kV test
Elasticity	5% at 23 °C according to DIN 30671 and DIN 30677-25
Flexibility	11% at 23 °C according to ASTM 522
Pressure resistance	100 µ at 90 °C according to DIN 30671
Hardness	Shore D 98 / > 100 according to EN ISO 2815
Adhesion	> 20 N/mm2 according to DIN 53232 and > 16 MPa according to DIN ISO 4624
Salt spray test	> 720 hours according to ASTM B 117
Maximum temperature	135 °C according to VDE 0368
Edge coverage	Excellent
CD-properties	Excellent at 30 days, 23 °C
Chemical resistance	pH 2 up to pH 13
Breakdown voltage	> 3 kV at 250 µm according to ISO 8130-2
Water absorption	100 days, 23 °C < 2% according to DIN 53495 100 days, 65 °C < 3% according to DIN 53495
Water immersion (5 y.)	no blisters ISO 7253
Cathodic disbandment test	at 23 °C < 10 mm DIN 30677-2

The pre heated ductile cast iron body gets dipped into the Resicoat® Epoxy powder. The heat causes the powder to fusion bond with the ductile cast iron permanently. The coating is GSK approved and 100% safe for drinking water.

GSK

The GSK, Quality Association for Heavy Duty Corrosion Protection of Powder Coated Valves and Fittings, was founded in 1993 in order to fulfil the growing quality requirements for pipelines in many European countries. Today the GSK has 27 members, all leading European manufacturers of fittings and valves, engineering companies and producers of fusion bonded epoxy powder coatings. The epoxy powder coating of valves and fittings is the ideal technology for long-term corrosion protection and involves the highest levels of quality control in their manufacture. GSK is recognised by RAL (German Institute for Quality Assurance and Quality Marks) and sets the quality and testing standards for machinery, materials, processes and quality assurance in the epoxy coatings technology. The regulations of the GSK not only meet the requirements of the relevant national and international standards (e.g. DIN, ISO) but also exceed them. The fixed quality level serves as a reliable standard for builders, engineers, construction workers and manufacturers. A safe and consistent quality fulfils high demands. The quality is controlled by an independent test laboratory: MPA Germany.

Approvals

A wide range of approvals assures the suitability in contact with gas and drinking water. The tests include water purity and bacterial attack. Furthermore the coating meets the requirements specified for use in waste water and gas pipe systems. The coating also meets the requirements of Kest SFW 2.0. Resicoat® R4 epoxy resin carries over 80 drinking water approvals. Some of these include: Belgaqua (Belgium), DGS (France), KTW (Germany), KIWA (the Netherlands), NSF Standard 61 (USA), WRAS (United Kingdom) as well as drinking water approvals in Austria, Switzerland and the Czech Republic. And last but not least the Resicoat® R4 meets the requirements of DIN 30677, 30677 T1 + T2, DIN 3476 and passes the GSK standard.

Coating application process

Before the fittings are coated, they are cleaned, and then grid-blasted according to class SA 2 ½. Both application techniques, Fluidised Bed Coating or Electrostatic Spray Application, are used to apply the coating to our fittings.

Electrostatic spray application

The powder is applied by an electrostatic spray gun, either manually or by a robot.

Fluidized bed coating

The powder melts onto the pre heated grid blasted fitting and excessive powder falls off, helped by movement of the coated part.

Anti friction coating

Galling or fretting is a severe form of adhesive wear, which occurs during sliding contact of one surface relative to another. Clumps of one part may stick to the mating part and break away from the surface. This is also the case with stainless steel. To prevent this problem, anti friction coatings can be used. Our stainless steel A2 and A4 bolts are coated with Lubo anti friction coating.

Lubo coating

In order to prevent friction, the stainless steel bolts are coated with Lubo coating, a low friction coating applied to threads. This is a dry lubricant and has the property of reducing the torque tension scatter during tightening. It is also used to prevent problems caused by weld splatter obstructing the threads of weld nuts during their placement and it eliminates the need for masking or cleaning when painted, since paint will not adhere to the coating.

Passivated nuts

Another anti friction measure is the use of passivated nuts. Here, another zinc layer lubricates the thread reducing friction.

GSK

RAL GÜTEZEICHEN
SCHWERER KORROSIONSSCHUTZ
VON ARMATUREN UND FORMSTÜCKEN

EN14525 KIWA, SVGW & ÖVGW

Technical specification flanges

Flanged connections are one of the oldest methods of connecting pipes and/or fittings together. One of the first flanged connections dates from the 17th century and was described in a standard for the first time in 1882. In 1926 the first material independent standard for mating dimension of flanges was published. These standard sizes made it possible to connect two flanges, independent of type, within the same DN (nominal size) and PN (pressure class) together regardless the material of which the flange was made from.

Flange mating dimensions

The mating dimensions describe the interchangeability between flanges within the same DN and PN. The mating dimensions are described by:

- diameter of bolt circle (pitch circle)
- number of bolts (pitch)
- diameter of bolt hole (bolt size)

The mating dimensions, which are used in our products, are standard PN 10 or PN 16 according:

- EN 1092-2, ISO 2531, DIN 2501
- DIN 28604 / 28605 and other
- EN-ISO-DIN orientated standards. This secures the interchangeability with BS 4504: Section 3.2:1989 up to DN300

Drilling patterns

(E.g. mating dimensions) of other standards can be supplied as long as they are allowed within the physical dimensions of the flange.

Physical dimensions

Other physical dimensions of the flange determine the strength of the flange. This strength is depending on the type of material of which the flange is made of. Physical dimensions are:

- the flange diameter
- the flange thickness
- the diameter and height of possible flange facing
- concentrically grooves

The flanges used in our products are all dimensioned type B (raised face) according to EN 1092-2.

Flange facing

All flange facings in our cast iron product lines are standard equipped with concentric grooves. These grooves, opposite to flat facings, give a ring tightening force to the flange gasket rather than a faced tightening. This ensures a heavy duty performance with high life expectancy in combination with rubber flange gasket.

Flange mating dimensions overview

DN (mm)

PN6		40	50	60	65	80	100	125	150	200	225	250	300	350		400	450	500		600	700		800	900	1000	1200
Outside diameter flange	D	130	140	150	160	190	210	240	265	320		375	440	490		540		645		755	860		975	1075	1175	1405
Diameter of bolt circle	K	100	110	120	130	150	170	200	225	280		335	395	445		495		600		705	810		920	1020	1120	1340
Number of bolts	N	4	4	4	4	4	4	8	8	8		12	12	12		16		20		20	24		24	24	28	32
Diameter of bolt hole	L	14	14	14	14	19	19	19	19	19		19	23	23		23		23		28	28		31	31	31	34
Nominal size bolts		M12	M12	M12	M12	M16	M16	M16	M16	M16		M16	M20	M20		M20		M20		M24	M24		M27	M27	M27	M30

DN (mm)

PN10		40	50	60	65	80	100	125	150	200	225	250	300	350		400	450	500		600	700		800	900	1000	1200
Outside diameter flange	D	See PN 16								340		395	445	505		565	640	670		780	895		1015	1115	1230	1455
Diameter of bolt circle	K									295		350	400	460		515	565	620		725	840		950	1050	1160	1380
Number of bolts	N									8		12	12	16		16	20	20		20	24		24	28	28	32
Diameter of bolt hole	L									23		23	23	23		28	28	28		31	31		34	34	37	41
Nominal size bolts										M20		M20	M20	M20		M24	M24	M24		M27	M27		M30	M30	M33	M36

DN (mm)

PN16		40	50	60	65	80	100	125	150	200	225	250	300	350		400	450	500		600	700		800	900	1000	1200
Outside diameter flange	D	See PN 40		175	185	200	220	250	285	340		405	460	520		580	640	715		840	910		1025	1125	1255	1485
Diameter of bolt circle	K			135	145	160	180	210	240	295		355	410	470		525	585	650		770	840		950	1050	1170	1390
Number of bolts	N			4	4	8	8	8	8	12		12	12	16		16	20	20		20	24		24	28	28	32
Diameter of bolt hole	L			19	19	19	19	19	23	23		28	28	28		31	31	34		37	37		41	41	44	50
Nominal size bolts				M16	M16	M16	M16	M16	M20	M20		M24	M24	M24		M27	M27	M30		M33	M33		M36	M36	M39	M45

DN (mm)

PN25		40	50	60	65	80	100	125	150	200	225	250	300	350		400	450	500		600	700		800	900	1000	1200
Outside diameter flange	D	See PN 40						270	300	360		425	485	555		620		730		845	960		1085	1185	1320	1530
Diameter of bolt circle	K							220	250	310		370	430	490		550		660		770	875		990	1090	1210	1420
Number of bolts	N							8	8	12		12	16	16		16		20		20	24		24	28	28	32
Diameter of bolt hole	L							28	28	28		31	31	34		37		37		41	44		50	50	57	57
Nominal size bolts								M24	M24	M24		M27	M27	M30		M33		M33		M36	M39		M45	M45	M52	M52

DN (mm)

PN40		40	50	60	65	80	100	125	150	200	225	250	300	350		400	450	500		600	700		800	900	1000	1200
Outside diameter flange	D	150	165	175	185	200	235	270	300	375		450	515	580		660		755		890	995		1140	1250	1360	1575
Diameter of bolt circle	K	110	125	135	145	160	190	220	250	320		385	450	510		585		670		795	900		1030	1140	1250	1460
Number of bolts	N	4	4	8	8	8	8	8	8	12		12	16	16		16		20		20	24		24	28	28	32
Diameter of bolt hole	L	19	19	19	19	19	23	28	28	31		34	34	37		41		44		50	50		57	57	57	62
Nominal size bolts		M16	M16	M16	M16	M16	M20	M24	M24	M27		M30	M30	M33		M36		M39		M45	M45		M52	M52	M52	M56

DN (mm)

DIN 1882		40	50	60	65	80	100	125	150	200	225	250	300	350		400	450	500		600	700		800	900	1000	1200
Outside diameter flange	D		160			200	230	260	290	350		400	450	520		575	630	680		790						
Diameter of bolt circle	K		125			160	180	210	240	310		350	400	485		520	570	625		725						
Number of bolts	N		4			4	4	4	6	6		8	8	10		10	12	12		16						
Diameter of bolt hole	L		18			18	18	22	22	22		22	22	25		25	25	25		30						
Nominal size bolts			M16			M16	M16	M20	M20	M20		M20	M20	M24		M24	M24	M24		M27						

DN (mm)

AS4087 standard pressure		40	50	60	65	80	100	125	150	200	225	250	300	350	375	400	450	500	525	600	700	750	800	900	1000	1200
Outside diameter flange	D		150		165	185	215	255	280	335	370	405	455	525	550	580	640	705	735	825	910	995				
Diameter of bolt circle	K		114		127	146	178	210	235	292	324	356	406	470	495	521	584	641	673	758	845	927				
Number of bolts	N		4		4	4	4	8	8	8	8	8	12	12	12	12	12	16	16	16	20	20				
Diameter of bolt hole	L		18		18	18	18	18	18	18	18	22	22	26	26	26	26	26	26	30	30	33				
Nominal size bolts			M16		M16	M16	M16	M16	M16	M16	M16	M20	M20	M24	M24	M24	M24	M24	M24	M27	M27	M30				

DN (mm)

AS4087 high pressure		40	50	60	65	80	100	125	150	200	225	250	300	350	375	400	450	500	525	600	700	750	800	900	1000	1200
Outside diameter flange	D		165		185	205	230		305	370	405	430	490	550	580	610	675	735	760	850		1015				
Diameter of bolt circle	K		127		146	165	191		260	324	356	381	381	438	495	552	610	673	699	781		674				
Number of bolts	N		4		8	8	8		12	12	12	12	12	12	16	20	20	24	24	24		28				
Diameter of bolt hole	L		18		18	18	18		22	22	26	26	26	26	26	30	33	33	33	36		36				
Nominal size bolts			M16		M16	M16	M16		M20	M20	M24	M24	M24	M27	M27	M27	M30	M30	M30	M33		M33				

DN (mm)

) Table E/ BS 10-1962 Table E		40	50	60	65	80	100	125	150	200	225	250	300	350	375	400	450	500	525	600	700	750	800	900	1000	1200
Outside diameter flange	D		150		165	185	215	255	280	335	370	405	455	525	550	580	640	705	735	825	910	995				
Diameter of bolt circle	K		114		127	146	178	210	235	292	324	356	406	470	495	521	584	641	673	756	848	927				
Number of bolts	N		4		4	8	8	8	8	8	12	12	12	12	12	12	16	16	16	16	20	20				
Diameter of bolt hole	L		18		18	18	18	18	22	22	22	22	26	26	26	26	26	26	30	33	33	36				
Nominal size bolts			M16		M16	M16	M16	M16	M20	M20	M20	M20	M24	M24	M24	M24	M24	M24	M27	M30	M30	M33				

DN (mm)

ANSI B 16.1 125 LB/ AWWA C-11		40	50	60	65	80	100	125	150	200	225	250	300	350	375	400	450	500	525	600	700	750	800	900	1000	1200
Outside diameter flange	D		152		178	191	229	255	280	343		405	483	533		597	635	699		813		984				
Diameter of bolt circle	K		121		140	152	191	216	241	298		362	432	476		540	578	635		749		914				
Number of bolts	N		4		4	4	8	8	8	8		12	12	12		16	16	20		20		28				
Diameter of bolt hole	L		19		19	19	19	22	22	22		25	25	29		29	32	32		35		35				
Nominal size bolts			M16		M16	M16	M16	M20	M20	M20		M22	M22	M25		M25	M29	M29		M32		M32				

DN (mm)

ISO 7005 PN16		40	50	60	65	80	100	125	150	200	225	250	300	350	375	400	450	500	525	600	700	750	800	900	1000	1200
Outside diameter flange	D		165		185	200	220	250	285	340		405	460	520		580	640	715		840	910					
Diameter of bolt circle	K		125		145	160	180	210	240	295		355	410	470		525	585	650		770	840					
Number of bolts	N		4		4	8	8	8	8	12		12	12	16		16	20	20		20	24					
Diameter of bolt hole	L		18		18	18	18	18	22	22		27	27	27		30	30	33		36	36					
Nominal size bolts			M16		M16	M16	M16	M16	M20	M20		M24	M24	M24		M27	M27	M33		M33	M33					

Insert stiffeners

In this chapter, the need of using insert stiffeners (also called support liners) in general is explained. Also the specific guideline of using inserts in combination with the Georg Fischer Waga N.V. products is mentioned.

Mechanical joints on plastic pipes
Plastic materials suffer from material relaxation, resulting in a change of shape over time. This phenomenon is known as stress relaxation. Especially when installing a mechanical fitting on plastic pipes, tightening of the bolts results in an increased surface pressure of the joint onto the plastic pipe wall. This extra pressure in most cases leads to a deformation of the pipe wall (picture 1), enhancing the relaxation process. In case of restraint mechanical joints, such as the MULTI/JOINT® 3000 Plus, the forces of the restraining mechanism brought onto the pipe are often much higher than the forces of the sealing mechanism. These higher stress levels will therefore result in a higher creep deformation and might cause a higher risk of joint failure.

By inserting a stainless steel insert stiffener into the plastic pipe end, the pipe is reinforced from the inside, ensuring that the pipe wall cannot be deformed (picture 2). This will result in the best possible connection on plastic pipes.

Bending torques
Another reason for using the stainless steel insert stiffeners is to avoid bending torques. A plastic pipe always tends to knick exactly at the spot of the sealing area when bending torques act on the pipe (picture 3.). This might result in leakages of the fitting. When using an insert stiffener, the bending point is diverted away from the sealing area, resulting in a longlasting leak free connection (picture 4).

Use of insert stiffeners
In order to guarantee the best possible performance of the Georg Fischer Waga N.V. fittings on plastic pipes, we set the following directive:

Use of an insert stiffener (approved by Georg Fischer Waga N.V.) is mandatory on all plastic pipes, both for restraint and non restraint connections, both for permanent and temporary connections.

Exceptions:
No insert stiffeners need to be used in water and gas applications on:
- PVC pipes with SDR-class 21 or thicker walled

No insert stiffeners need to be used for temporary (< 5 years) non restraint connections in water applications on:
- PP-B, PB and HDPE (80/100/100-RC) pipes with SDR-class 11 or thicker walled

Note: in gas applications on PP-B, PB and HDPE (80/100/100-RC) pipes the use of insert stiffeners is mandatory.

Design and properties
Georg Fischer Waga N.V. offers two types of insert stiffeners for different applications. Depending on the application the right choice has to be made. To guarantee the correct support to the spigot, insert stiffeners must be designed according the intended use for plastic piping systems. Therefore insert stiffeners must conform to the following properties to guarantee its function.

Mechanical pipe joints

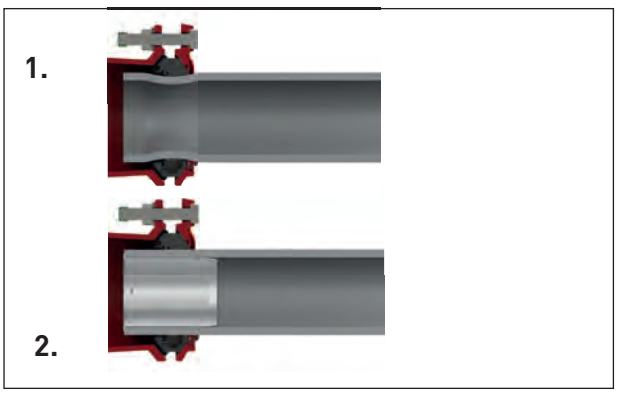

Residual stress and bending torques

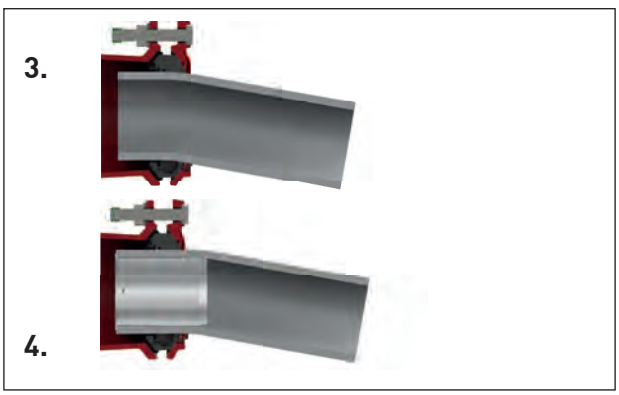

The insert stiffener must:

- be axially secured to stay in place inside the spigot
- not be oversized to reduce residual stress due to installation
- not be too small in order to guarantee sufficient support
- have the appropriate length to support at least the joint area plus 0,2 x the outside diameter
- be ridged to at least withstand the forces brought on by the sealing and restraining mechanism
- be easy to install
- be free of corrosion
- not affect the content of the pipe system

Insert Economy

The Insert Economy is designed for (PE, PB, PVC etc.) pipes dimensioned according to DIN 8074. The insert can be installed in these pipes as long as they are within the allowed production tolerances. In order to secure a sufficient support to the pipe, the (nominal) diameter of the insert is just below the nominal inside diameter of the pipe. This means that when the pipe is produced at its biggest tolerance, it "falls in", supported by the dimples. When the pipe is produced at its lowest tolerance, you need some extra force to put in the insert. But this extra force should be no more than can be achieved with a hammer. The Insert Economy is available for various SDR-sizes. To guarantee the correct working of the insert, the use is limited to pipes up to DN300. Above this dimension, the production tolerances become such, that sufficient support is no longer guaranteed. For inserts bigger than DN300, we refer to inserts with wedge.

Insert Economy

Insert with wedge

The Insert with Wedge is intended for pipes with larger production tolerances and pipes produced according to unknown standards, and is available up to DN1600. The wedge construction offers a small tolerance, overcoming minor dimension differences of the pipe. After positioning the insert, the wedge is hammered in, to fix the insert. After that the top end of the remaining wedge has to be sawed off.

Insert with wedge

Insert with wedge MJ DN625 – DN800

This Insert with Wedge MJ DN625 - DN800 is specially designed for the MULTI/JOINT® 3000 Plus DN625 – DN800. Other sizes are available on request. In contrast to the Insert Economy and Insert with Wedge for the smaller sizes, this product comes with a separate top and bottom part. After positioning the insert, the two wedges are placed on each side between the two compartments. When the wedges are properly placed according to the corresponding user manual, the remaining parts are sawed off.

Insert with wedge MJ DN625 - DN800

MULTI/JOINT® 3000 Plus principle

Proven quality

The MULTI/JOINT® 3000 Plus system comprises wide range fittings, flange adaptors, reduction pieces, bends, duck feet bends, end caps and PE adaptors of ductile cast iron in the ranges DN50 - DN825. Thanks to the unique wide range sealing system all fittings can be made restraint as long as the nominal diameters are the same. All you need to know is the outer diameter of the pipe, the medium and the working pressure. The MULTI/JOINT® 3000 Plus system has a range up to 43 mm and connects pipes from 46 - 869 mm. MULTI/JOINT® 3000 Plus restraint fittings are suitable for applications in water pipes up to 16 bar and gas pipes up to 8 bar. The MULTI/JOINT® system has earned its reputation for quality on the international market over the past 30 years.

Unique sealing system

When the quality standard is high, you need a reliable connection. The MULTI/JOINT® 3000 Plus system meets the demands and is suitable for applications in water and gas. The uniqueness of the system lies in the sealing which consists of a flexible ring (Uni/Fleks ring or Uni/Fiks ring) which consists of plastic segments and a rubber sealing ring (EPDM or NBR). The Uni/Fiks version is supplied with metal grippers which make the MULTI/JOINT® 3000 Plus system restraint on all types of pipe materials.

Uni/Fleks ring

The Uni/Fleks ring is a combination of a plastic ring, consisting of plastic segments, with a thin rubber sealing (Varioseal). This rubber sealing (available both in EPDM and NBR) is a reliable solution for both water and gas applications. The Uni/Fleks ring is non restraint.

Uni/Fiks ring

When metal grippers (Uni/Fiksers) are placed in the Uni/Fleks ring, the sealing system is restraint. The Uni/Fiks ring with the Uni/Fiksers makes a restraint connection up to an impressive 16 bar for water and 8 bar for gas, both on rigid pipes and plastic pipes.

Segments

The plastic segments in the ring sizes DN50 – DN125 consist of one part, made of POM. Furthermore the design of the ring enables large range coverage in outside diameters. The plastic segments in the ring sizes DN150 – DN825 consist of two parts; the wedge and the topple. The wedge is made of POM and is in contact with the pipe material. The topple, made of polyamide, ensures the integrity of the ring. This combination results in a progressive sealing and gripping mechanism. In the ring sizes DN425 – DN825 a clip has been added to fixate the ring in the body of the fitting ensuring easy installation with no interference.

Uni/Fiksers

The Uni/Fiksers ensure optimal restraint both on rigid pipe materials and on plastic pipes, without compromise.

Body and gland

The length of the body determines the insertions depth or joint gap possible. Because the insertion depth complies, and even exceeds, the dimensions given in EN 14525, large joint gaps can be covered. Secondly the design of the body and gland are such that losses in tension, which will occur in time, are compensated.

Nominal angularity

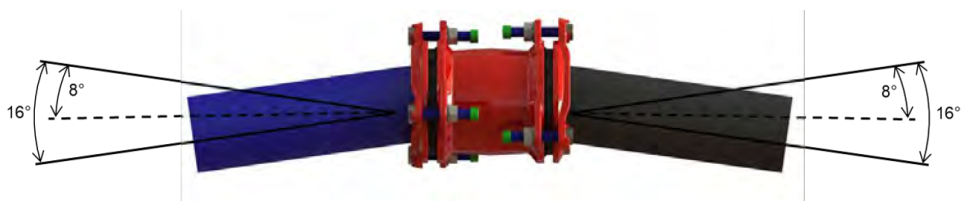

The angularity is based on the middle of the fitting range.

Pressure/Performance

See table in the user manual of the MULTI/JOINT® 3000 Plus.

Joint gap

Maximum axial distance between any point of the spigot ends of the pipes to be connected (coupling), or, maximum axial distance between any point of the spigot end of the pipe and the flange face (flange adaptor).

Depth of engagement (DE)

Minimum distance between any point of the spigot end and the internal face of the joint gasket. The manufacturer shall declare the maximum joint gap.

Minimum and maximum insertion depth

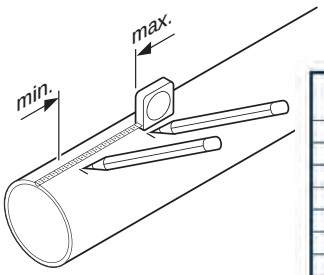

DN	Minimum (mm)	Maximal (mm)
DN50	84	95
DN65	84	100
DN80	84	100
DN100	90	105
DN125	90	115
DN150	110	130
DN200	110	145
DN225	125	170
DN250	130	180
DN300	130	185
DN350	130	185
DN400	135	190
DN425	160	225
DN450	160	225
DN475	160	225
DN500	160	225
DN550	160	225
DN600	170	235
DN625	210	320
DN675	210	320
DN700	210	320
DN800	210	320
DN825	210	320

Angularity

The MULTI/JOINT® 3000 Plus family has on each side a nominal angularity at installation of 8° (based on the middle of the range).

Temperature

The MULTI/JOINT® 3000 Plus has different parts, which resist different temperatures.

	NBR	EPDM
Maximum allowable temperature for joint	-5 °C up to +50 °C	0 °C up to +50 °C

Certified quality

The MULTI/JOINT® 3000 Plus family is both tested internally as well as externally by independent laboratories. All performed tests comply with the international standard requirements such as EN 14525. For more detailed information please contact us.

Note: Care must be taken to ensure that manufacturer's declared maximum joint gap is not exceeded due to pipe contraction or expansion as a result of temperature or pressure change.

Guidelines on storage of MULTI/JOINT® 3000 Plus

At any given time between production and use, the product should be stored in accordance with the following recommendations:

- The storage temperature should be below 25 °C and preferably below 15 °C
- The rubber seals should be protected from light, in particular strong sunlight and high ultraviolet artificial light
- The rubber seals should not be stored near equipment that generates ozone (e.g. mercury vapour lamps) or high voltage electrical equipment, which releases electric sparks or silent electrical discharges

The shelf life of a MULTI/JOINT® 3000 Plus fitting is 2 years from date of assembly (if properly stored). After the expiration date, a MULTI/JOINT® 3000 Plus fitting can still be installed, but may have a lower life expectancy.

Coupling

Reduced coupling

Flange adaptor

Reduced flange adaptor

(Reduced) Spigot end

Bend

Reduced duckfoot

PE adaptor

End cap (blind)

End cap (threaded)

Multi/Clamp length selection

Multi/Clamp can be used to repair the following types of pipe:

- (Ductile) Cast Iron (DI)
- Steel
- Asbestos Cement
- PVC*
- PE*
- GRP*

** If pipe repair clamps are to be used on plastic pipes, please always contact Georg Fischer Waga N.V.*

The following types of damage can be repaired:

Cracked pipe after hot tap

Pit holes

Longitudinal cracks

Multi/Clamp repair clamps should be used under following conditions:

- The length of the clamp should be equal to at least the pipe outside diameter.
- The length of the clamp should be at least 150mm longer (A+C) than the length of any crack (B) on pipes with an outside diameter up to 350mm. On larger pipes this should be at least 200mm.
- For all plastic pipes such as PVC/PE, the width of the clamps should be 50% longer and bolt torque should be reduced by 50%. This to avoid the gasket being pushed out.
- On PE and similar plastic pipes Multi/Clamp repair clamps should only only be used as a short term repair solution.
- The maximum allowable distance between two pipe ends should not exceed 10mm.
- The maximum allowable offset should not exceed 3mm.

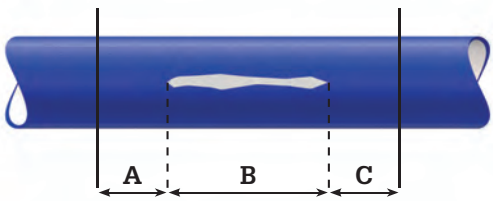

User manuals

User manual MULTI/JOINT® 3000 Plus DN50 - DN400

Georg Fischer Waga N.V.

+GF+

GB	User Manual
D	Montageanleitung
NL	Montagehandleiding
F	Manuel d'instruction
NO	Brukermanual
SE	Användarmanual
DK	Montagevejledning
FIN	Käyttömanuaali
ES	Manual de instalacion
PT	Manual de instalação
IT	Manuale d'uso
RO	Manualul utilizatorului
CZ	Návod k montáži
GR	Εγχειρίδιο χρήσης
HU	Szerelési utasítás
RUS	Руководство по установке
PL	Instrukcja Obsługi

MULTI/JOINT® 3000 Plus
DN50-DN400

Georg Fischer Waga N.V.-P.O.Box 290-
8160 AG Epe-The Netherlands-www.waga.nl

WA4000/12-20/ML

01

FITTING CHOICE

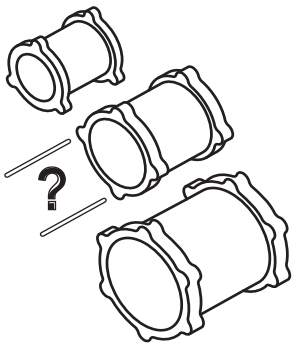

D	Kupplung auswählen	ES	Elegir union
NL	Keuze koppeling	IT	Scelta del giunto
F	Choisir le raccord	GR	Επιλογή συνδέσμου
NO	Valg av kobling	CZ	Výběr spojky
SE	Kopplings val	HU	Idom kiválasztása
DK	Valg af kobling	RO	Alegerea cuplei
FIN	Muhvi vaihtoehdot	PL	Wybór łącznika
PT	Escolha do tipo de ligação	RUS	Выбор фитинга

WA4000/12-20/ML

01 CHECK TABLE IF CHOSEN FITTING MATCHES PIPE OD.

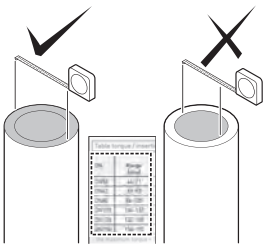

DN	Range (mm)
DN50	46-71
DN65	63-90
DN80	84-105
DN100	104-132
DN125	132-155
DN150	154-192

DN	Range (mm)
DN200	192-232
DN225	230-268
DN250	267-310
DN300	315-356
DN350	352-393
DN400	392-433

D	Die Rohraussendurchmesser überprüfen und mit der Tabelle vergleichen.
NL	Kies de juiste koppeling m.b.v. de tabel.
F	Vérifiez sur le tableau si le raccord couvre bien le diamètre extérieur du tube.
NO	Sjekk med tabell at koblingen stemmer overens med utvendig diameter rør.
SE	Kontrollera om vald rördel stämmer mot rörets yt-terdiameter.
DK	Kontroller med tabellen om den valgte kobling passer til rørdiameteren.
FIN	Tarkista taulukosta jos valitut asennukset sopivat putkelle QD.
PT	Ver na tabela se os acessórios estão de acordo com o diâmetro exterior dos tubos.
ES	Ver tabla anexa para unir distintos diametros exteriores.
IT	Controllare sulla tabella se il giunto è idoneo al d.e. del tubo.
GR	Με βάση το πίνακα μεγεθών, επιβεβαιώστε ότι ο σύνδεσμος είναι κατάλληλος για τη συγκεκριμένη διάμετρο αγωγού στον οποίο πρόκειται να τοποθετηθεί.
CZ	V tabulce zkontrolovat použitelnost tvarovky v daném rozsahu průměrů.
HU	Ellenőrizze, hogy a kiválasztott idom megfelel-e a cső külső átmérőjéhez.
RO	Se verifica in tabel daca fitingul ales corespunde Dext al tevii.
PL	Sprawdź w tabeli czy łącznik pasuje do zewnętrznej średnicy rury.
RUS	Проверить по таблице совместимость фитинга с трубой.

WA4000/12-20/ML

02 03 04 PREPARE FITTING FOR INSTALLATION

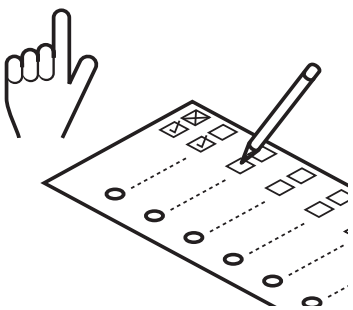

D	Kupplung für die Montage vorbereiten
NL	Montageklaar maken
F	Préparez le raccord pour l'installation
NO	Forbredelse av kobling
SE	Förbered kopplingen för installation
DK	Klargør koblingen til installationen
FIN	Valmista muhvi asennusta varten
PT	Preparação da ligação
ES	Preparar union para instalacion
IT	Preparazione per l'installazione
GR	Προετοιμασία συνδέσμου για τοποθέτηση
CZ	Příprava spojky pro instalaci
HU	Idom előkészítése a felhelyezésre
RO	Pregatirea cuplei pentru instalare
PL	Przygotowanie łącznika do instalacji
RUS	Подготовка фитинга к установке

WA4000/12-20/ML

02 DO NOT REMOVE OR GREASE BOLTS.

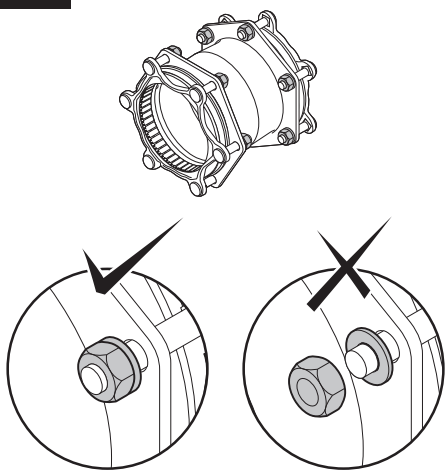

D	Schrauben nicht entfernen und nicht fetten
NL	Bouten niet verwijderen of invetten
F	Ne pas enlever et/ou graisser les vis
IT	Non rimuovere e non ingrassare le viti

03

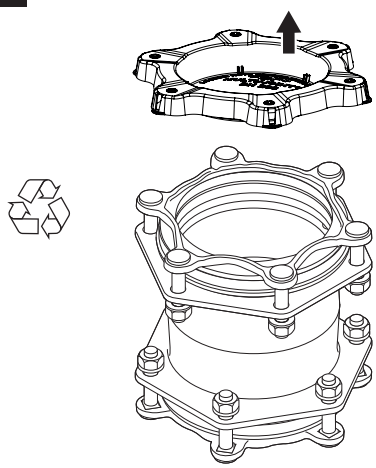

WA4000/12-20/ML

04 CHECK IF “FIKSERS” (METAL GRIPPERS) POSITION IS CORRECT.

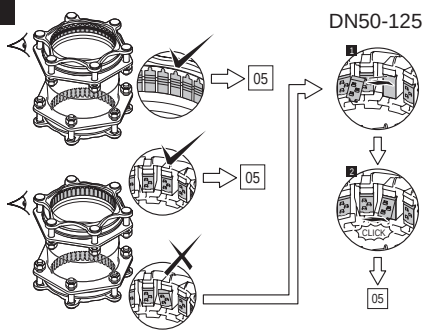

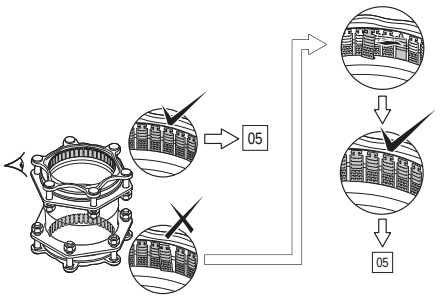

D	Sicherstellen, dass alle Fikser richtig positioniert sind.
NL	Controleer de juiste positie van de “Fiksers”.
F	Assurez-vous que les “Fiksers” (les mors métalliques) sont correctement positionnés.
NO	Kontroller at “Fikserne” er i riktig possisjon.
SE	Kontrollera om “Fiksers” position är korrekt.
DK	Kontroller om “Fikernes” placering er korrekt.
FIN	Tarkista “Fikseri”, että asento on oikein.
PT	Ver se a posição dos “Fiksers” é correto.
ES	Revise si los “Fiksers” se encuentran en la posicion correcta.
IT	Controllare gli inserti antisfilo “Fiksers” sono OK.
GR	Ελέγξτε αν τα εξαρτήματα αγκύρωσης που διαθέτει ο σύνδεσμος ‘‘Fiksers’’ έχουν αγκυρώσει σωστά πάνω στον αγωγό.
CZ	Zkontrolovat správnou polohu fixerů.
HU	Ellenőrizze, hogy a “Fikser”-ek megfelelő helyzetben vannak-e.
RO	Se verifica daca pozitia elementelor de fixare “Fiksers” este corecta.
PL	Sprawdź poprawność ułożenia blaszek.
RUS	Убедиться в правильности установки “Fiksers” (металлических фиксаторов).

WA4000/12-20/ML

05 06 07 08 09

PIPE PREPARATION

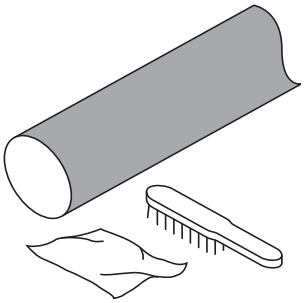

D	Zu verbindende Rohre vorbereiten	ES	Preparacion de la tuberia
NL	Voorbereiden buis	IT	Preparazione tubazione
F	Préparez les tubes	GR	Προετοιμασία Αγωγού
NO	Forbredelse av rør	CZ	Příprava trubky
SE	Rörberedning	HU	Cső előkészítése
DK	Klargøring af røret	RO	Pregatirea conductei
FIN	Putken esivalmistus	PL	Przygotowanie rury
PT	Preparação do tubo	RUS	Подготовка труб

WA4000/12-20/ML

05 REMOVE ALL RUST, DIRT, BURRS, DAMAGES AND ALL FINISHING LAYERS FROM THE PIPE. MOUNT ON MEDIUM CARRYING PIPE MATERIAL ONLY.

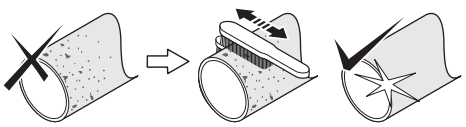

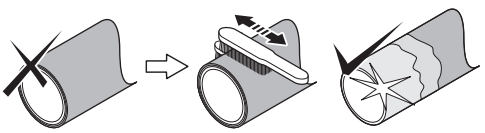

D	Von der drucktragenden Rohroberfläche allen Rost, Grat, Schmutz, Schäden und alle Beschichtungen entfernen.	ES	Retirar toda la suciedad, polvo, daños y etiquetas de la tuberia. Montar solamente entre tubos.
NL	Verwijder alle roest, vuil, bramen, beschadigingen en buislagen. Monteer alleen op de mediumvoerende buis.	IT	Rimuovere sporcizia, polvere, intagli e gli strati superficiali della tubazione. Il montaggio deve avvenire sullo strato a contatto del fluido trasportato.
F	Eliminez la rouille, la saleté, les bourrelets de soudures, les défauts de surface et toutes les couches de finition du tube. Assemblez seulement sur le matériau principal du tube.	GR	Καθαρίστε όλα τα οξειδωμένα τμήματα, τις επικαθίσεις, τις παραμορφώσεις και τις υλικές βλάβες της επιφάνειας του αγωγού καθώς και τις επιστρώσεις του αγωγού μέχρι τον αγωγό μεταφοράς του υλικού.
NO	Fjern all rust, løs overflate samt skader på materialet og overflatebehandling.	CZ	Odstranit všechny nečistoty, rez, otřepy a všechny dodatečné vrstvy z povrchu trubky. Montovat pouze na trubky určené pro transport médií.
SE	Avlägsna all rost, smuts, grader och eventuell ytbehandling från röret. Montera endast på mediabärande rörmaterial.	RO	Indepartati praful, crestaturile, murdaria, defectele precum si toate straturile de acoperire de pe teava. Se monteaza doar pe materialul conductei.
DK	Fjern al rust, snavs, spåner, beskadigelser og alle belægninger på røret. Monter kun på selve det mediebærende rør.	PL	Usuń wszelkiego rodzaju uszkodzenia, zabrudzenia, zadrapania, rdzę i wierzchnie warstwy na długości rury pokrytej przez łącznik.
FIN	Poista kaikki ruoste, lika, taite, vauriot ja kasaumat putkesta. Asenna ainoastaan keskivahvalle putkelle.	RUS	Удалить любые загрязнения, ржавчину, задиры и наплывы, а так же покрытия с поверхности трубы. Устанавливать только на основной материал трубы.
PT	Remover oxidação, sugeira, rebarbas, e revestimento do tubo.		
HU	Távolítson el minden rozsdát, szennyeződést, sorját, sérüléseket és minden fedőréteget a csőről. Csak közvetlenül a közeg szállító csőanyagra helyezze fel az idomot.		

WA4000/12-20/ML

06 REMOVE ALL DIRT, BURSS, DAMAGES AND ALL FINISHING LAYERS FROM THE PIPE. USE AN (BY GEORG FISCHER) APPROVED SCRAPING TOOL. MOUNT ON MEDIUM CARRYING PIPE MATERIAL ONLY.

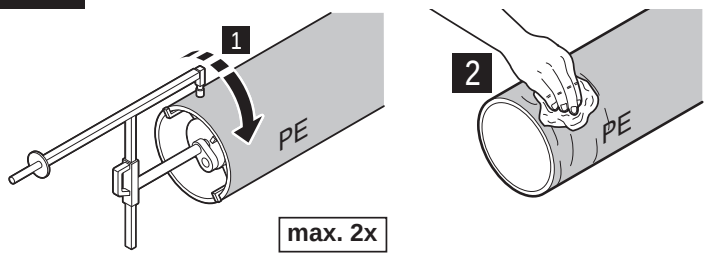

GAS / GAZ

D	Für PE-Rohre ist ein Georg Fischer Schälgerät zu verwenden.
NL	Gebruik een door Georg Fischer goedgekeurde schiller.
F	Utilisez un grattoir mécanique approuvé par Georg Fischer.
NO	Bruk skrapeverktøy godkjent av Georg Fischer.
SE	Använd ett (av Georg Fischer) godkänt skrapverktyg.
DK	Brug et (af Georg Fischer) godkendt skrabeværktøj.
FIN	Käytä (Georg Fischer) hyväksymää karhennus työkalua.
PT	Usar uma ferramenta (Georg Fischer) adequada.
ES	Utilizar un rascador circular Georg Fischer.
IT	Utilizzare in raschiatore approvato da Georg Fischer.
GR	Για τις εργασίες καθαρισμού και λείανσης χρησιμοποιείστε το κατάλληλο (από την GF) εργαλείο.
CZ	Použít škrabku (schválenou Georg Fischer).
HU	Használjon (GF által jóváhagyott) hántoló szerszámot.
RO	Se va utiliza un dispozitiv de raschetat recomandat (de GF).
PL	Użyj skrobaka (Georg Fischer) do przygotowania rury.
RUS	Использовать только разрешенный (компанией Georg Fischer) инструмент для зачистки.

WA4000/12-20/ML

07 CHECK TABLE FOR MINIMUM INSERTION DEPTH (X).

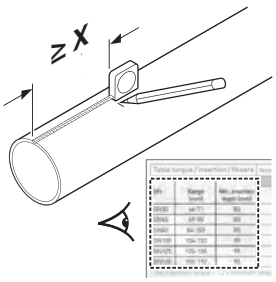

DN	X Min. insertion depth (mm)*
DN50	84
DN65	84
DN80	84
DN100	90
DN125	90
DN150	110

DN	X Min. insertion depth (mm)*
DN200	110
DN225	125
DN250	130
DN300	130
DN350	130
DN400	135

** For maximum joint gap information; see our technical manual*

D	Aus der Tabelle die Einstecktiefe (X) entnehmen.
NL	Zie de tabel voor de minimale insteekdiepte (X).
F	Vérifiez sur le tableau la profondeur d'insertion (X) correcte du tube.
NO	Sjekk med tabell for korrekt innstikksdybde (X).
SE	Kontrollera i tabellen korrekt insticksdjup (X).
DK	Kontroller med tabellen for korrekt indstiksdybde (X).
FIN	Tarkista taulukosta oikea asennus syvyys (X).
PT	Ver na tabela a profundidade (X) de inserção do tubo no acessório.
ES	Ver tabla para la profundidad de inserción minima (X).
IT	Controllare sulla tabella la profondità di inserimento (X).
GR	Συμβουλευτείτε τον πίνακα για την υπόδειξη του κατάλληλου βάθους εισαγωγής (X) του συνδέσμου στον αγωγό.
CZ	Zkontrolovat v tabulce správnou hloubku zasunutí (X).
HU	Ellenőrizze a táblázatot a megfelelő betolási mélység érdekében (X).
RO	Se verifica in tabel adancimea corecta de inserare (X).
PL	Korzystając z tabeli określ głębokość nasunięcia łącznika (X).
RUS	Проверить по таблице значение глубины ввода трубы (X).

WA4000/12-20/ML

08

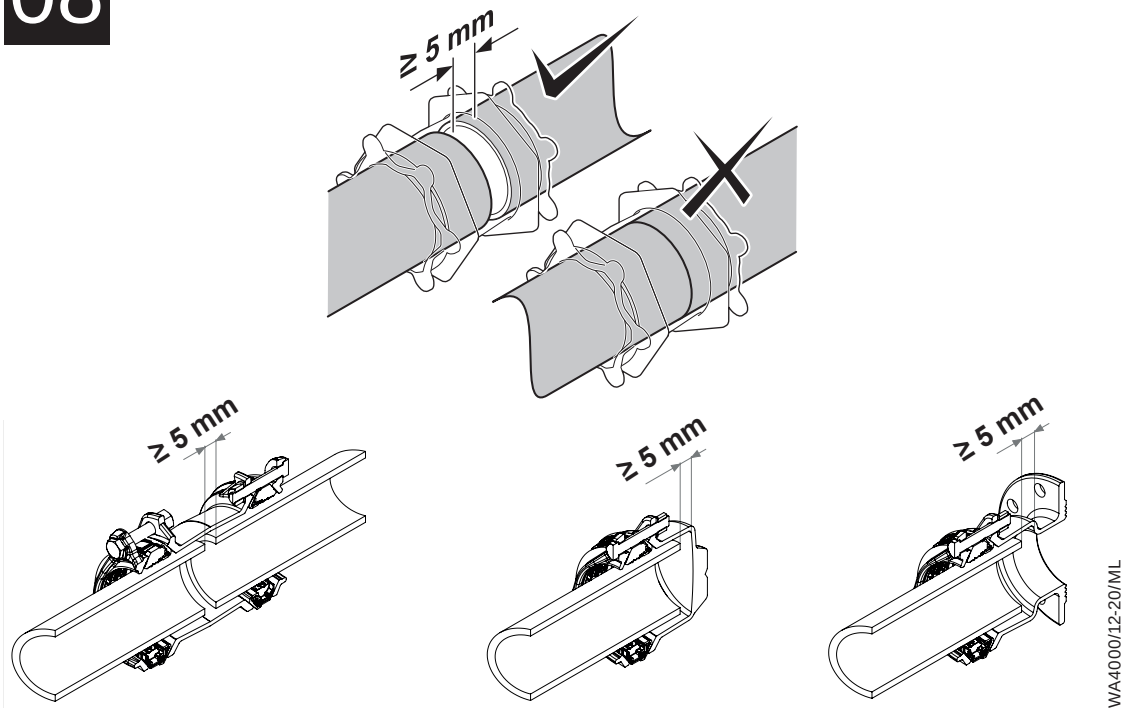

WA4000/12-20/ML

09

APPLY SUITABLE GREASE ONLY IN GAS APPLICATIONS

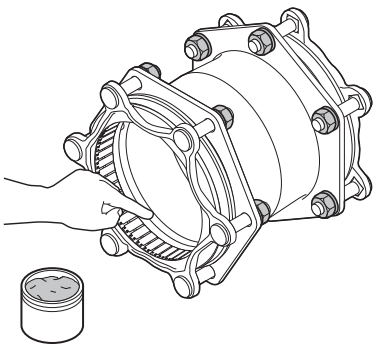

GAS / GAZ

D	Für die Gasanwendung den Dichtungsbereich ausreichend mit Gleitmittel versehen.
NL	Smeer de afdichting in met een geschikt glijmiddel.
F	Lubrifiez le bague de joint avec une graisse appropriée.
NO	Bruk egnet glidemiddel.
SE	Applicera lämpligt smörjmedel.
DK	Påfør egnet glidemiddel.
FIN	Lisää soveltuva rasva.
PT	Aplicar lubrificante adequado (nunca de origem mineral).
ES	Aplicar la grasa correspondiente a la junta.
IT	Applicare lubrificante opportuno.
GR	Τοποθετήστε κατάλληλη ποσότητα λιπαντικής ουσίας στα μηχανικά μέρη του συνδέσμου.
CZ	Aplikovat vhodné mazivo.
HU	Használjon megfelelő kenőanyagot.
RO	Se aplica lubrifiant.
PL	Nałóż warstwę smaru.
RUS	Использовать только подходящую смазку.

WA4000/12-20/ML

10 11 12 13 13 14

INSTALLATION

EN:
When manoeuvring the product out of the packaging to the pipe surface, please ensure that the proper lifting procedures are followed. Ensure that local safety and lifting procedures are adopted. All lifting should be done by qualified personnel, with approved equipment.

NL:
Zorg ervoor dat bij het manoeuvreren van het product vanuit de verpakking naar het buisoppervlak, de juiste hijsprocedures in acht worden genomen. U dient de lokale veiligheids- en hijsvoorschriften op te volgen. Het hijsen van producten dient te gebeuren met gekeurde hijsmiddelen en gekwalificeerd personeel.

D:
Bitte stellen Sie eine ordnungsgemäße manuelle Handhabung sicher, wenn das Produkt aus seiner Verpackung entnommen, transportiert und am Rohr angebracht wird. Ist der Einsatz mechanischer Hebezeuge erforderlich, so muss gewährleistet werden, dass sichere Arbeitsverfahren angewendet werden, geprüfte und anerkannte Hebezeuge verwendet werden und von qualifiziertem Personal durchgeführt werden.

D	Montage	ES	Instalación
NL	Montage	IT	Installazione
F	Installation	GR	Installazione
NO	Montering	CZ	Instalace
SE	Installation	HU	Felhelyezés
DK	Installation	RO	Instalarea
FIN	Asennus	PL	Montaż
PT	Instalação	RUS	Установка

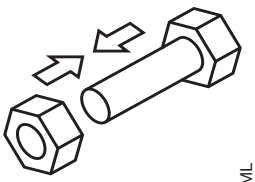

WA4000/12-20/ML

10 NOMINAL ANGULARITY*

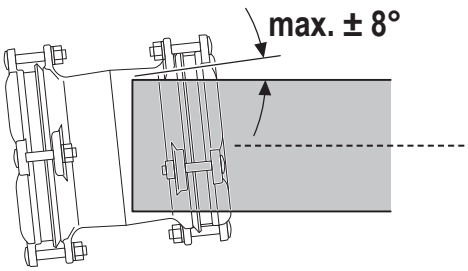

* based on the middle of the range

11

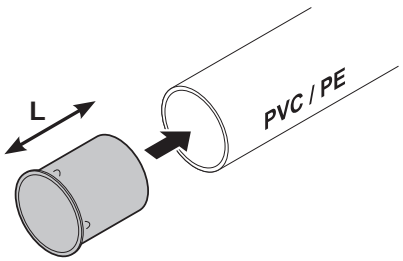

(insert approved by Georg Fischer Waga N.V.)

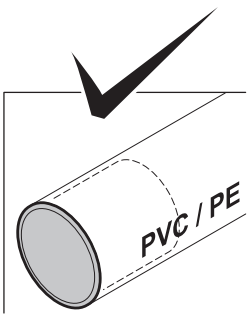

WA4000/12-20/ML

12 MAKE SURE “FIKSERS” (METAL GRIPPERS) ARE IN CORRECT POSITION! FOR PE/PVC SEE WARNING ⚠

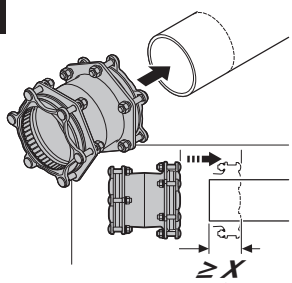

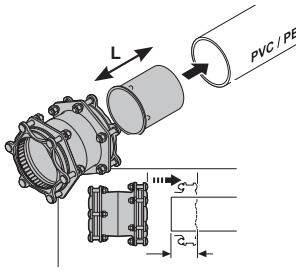

PVC / PE

⚠

≥ x + 2,5 mm ≤ L

D	Sicherstellen, dass alle Fikser richtig positioniert sind.
NL	Houd de “Fiksers” in de juiste positie! Bij gebruik steunbus PE/PVC): let op! Max. insteekdiepte ≤ lengte steunbus (L).
F	Assurez-vous que les “Fiksers” (les mors métalliques) sont correctement positionnés.
NO	Ved strekkfast løsning sjekk at Fikserne er på plass.
SE	Säkerställ att “Fiksers” (metal gripbleck) är korrekt positionerade.
DK	Vær opmærksom på om “Fikserne” (metal-griberne) sidder korrekt!
FIN	Varmista “Fikserit” (metalli puristimet) ovat paikallaan.
PT	Garantir que os “Fiksers” (“grampos” de metal) estão na posição correto.
ES	Asegurarse de utlizar los Fiksers adecuados en la posicion adecuada.
IT	Controllare che le placche antisfilo metalliche siano fissate.
GR	Ελέγξτε αν τα εξαρτήματα αγκύρωσης που διαθέτει ο σύνδεσμος “Fiksers” είναι σε κατάλληλη θέση έτσι ώστε να εφαρμόσουν και να αγκυρώσουν το σύνδεσμο στον αγωγό κατά τη σύσφιξη.
CZ	Zkontrolovat správnou pozici fixerů (zákusné díly).
HU	Győződjön meg róla, hogy a “Fikser”-ek (fém húzásbiztosítók) megfelelő helyzetben vannak-e!
RO	Se verifica daca elementele metalice de fixare “Fiksers” sunt in pozitia corecta!
PL	Upewnij się czy blaszki “Fiksers” są odpowiednio ułożone.
RUS	Убедиться в правильности установки “Fiksers” (металлических фиксаторов).

WA4000/12-20/ML

13a TIGHTEN THE BOLTS WITH THE CORRECT TORQUE.

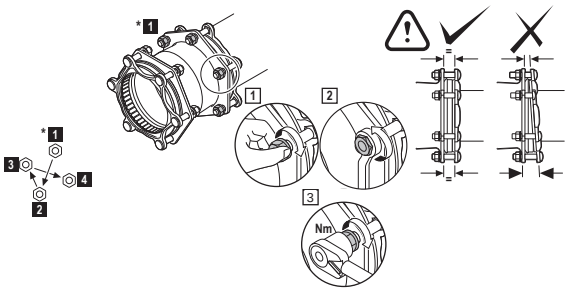

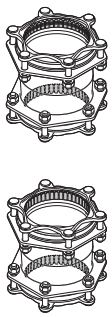

MULTI/JOINT® 3000 Plus **without Fikser**

MULTI/JOINT® 3000 Plus **with Fikser**

DN50-125 DN150-400

D	Der Tabelle das richtige Schraubendrehmoment entnehmen. Die Verwendung eines Drehmomentschlüssels ist zwingend erforderlich.
NL	Zie de tabel voor het juiste aandraaimoment.
F	Vérifiez dans les tableaux le couple de serrage à respecter.
NO	Mutrene strammes i kryss, da man skal holde samme avstand mellom koblingshus og trykkflens(gland). Etterstram med en momentnøkkel ihht. Momenttabell.
SE	Kontrollera i tabell korrekt åtdragningsmoment.
DK	Det rigtige tilspændingsmoment findes i tabellen.
FIN	Tarkista taulukosta oikea vääntömomentti.
PT	Ver na tabela a força de aperto.
ES	Ver tabla para el par de apriete.
IT	Controllare la tabella per il serraggio.
GR	Συμβουλευτείτε τον πίνακα για την επιλογή της κατάλληλης στρεπτικής ροπής που θα πρέπει να εφαρμοστεί στον σύνδεσμο, κατά την διαδικασία της σύσφιξης του στον αγωγό.
CZ	Zkontrolovat v tabulce správný utahovací moment.
HU	Ellenőrizze a táblázatot a megfelelő nyomaték érdekében.
RO	Se verifica in tabel valoarea momentului de stangere.
PL	Odczytaj z tabeli odpowiedni moment dokręcania śrub.
RUS	Проверить по таблице соответствующий момент затяжки болтов.

WA4000/12-20/ML

13b CHECK TABLE FOR INSTALLATION TORQUE AND PRESSURE RATING.

RESTRAINT

MULTI/JOINT® 3000 Plus **with Fikser**

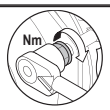

(S)St, CU, DCI, GCI, AC*, GRP*, PVC, PE, PEX, PP-B, PP-H, ABS
(* NO guarantee as quality varies!)

DN	Torque (Nm)	MOP gas (bar)	PFA water (bar)
DN50	30	8	16
DN65	40		
DN80	60		
DN100	100		
DN125			
DN150	120		
DN200			
DN225	140		
DN250			
DN300			
DN350	140	8**	16**
DN400			

NON-RESTRAINT

MULTI/JOINT® 3000 Plus **without Fikser**

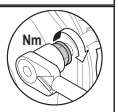

(S)St, CU, DCI, GCI, AC, GRP, PVC, PE, PEX, PP-B, PP-H, ABS

DN	Torque (Nm)	MOP gas (bar)	PFA water (16 bar)	Torque (Nm)	PFA water (25 bar)
DN50	30	8	16	30	25
DN65	30			40	
DN80	40			60	
DN100	80			100	
DN125					
DN150					
DN200					
DN225	120			140	
DN250					
DN300					
DN350					
DN400					

**** MOP 5 BAR GAS / PFA 10 BAR WATER FOR PLASTIC PIPE MATERIALS**

WA4000/12-20/ML

14 ≤ 0 ºC ONLY ON PE PIPE UNDER FREEZING CONDITIONS, APPLY TORQUE (PRESCRIBED UNDER 13) ONE MORE TIME AFTER 30 MINUTES.

PE

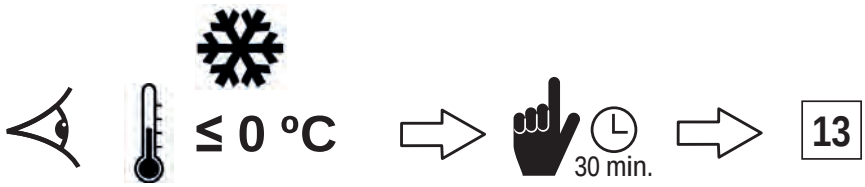

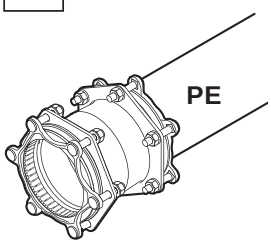

D	Nur für Einsatz auf PE Rohren bei Temperaturen ≤ 0, das unter 13 ermittelte Schraubendrehmoment nach 30 Minuten noch einmal aufbringen.
NL	Alleen bij montage op PE bij temperaturen onder 0, het (onder 13) voorgeschreven draaimoment na 30 minuten nog eenmaal aanbrengen.
F	Répetez l'étape 13 après 30 minutes seulement sur des tubes en PE en temps glacial.
HU	≤ 0 °C fagypont alatti hőmérsékleten, csak PE csöveken, 30 perc elteltével újra nyomatékra kell húzni a 13. oldalon leírtak szerint

WA4000/12-20/ML

15
16

TESTING

$P_{max} \leq 1{,}5 \times PFA$ *

D	Dichtheitsprüfung	ES	Probar
NL	Testen	IT	Test
F	Essais	GR	Έλεγχος/ δοκιμές
NO	Trykktesting	CZ	Zkouška
SE	Testa	HU	Tesztelés
DK	Prøvning	RO	Testarea
FIN	Testi	PL	Testowanie
PT	Teste	RUS	Испытание

WA4000/12-20/ML

15

CONDUCT A PRESSURE TEST.

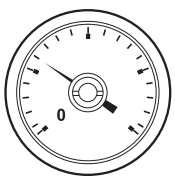

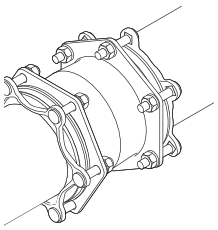

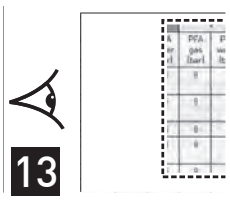

*** PN25 → $P_{max} \leq 30$ bar**

D	Dichtheitsprüfung durchführen.	ES	Realizar un test de presión.
NL	Voer een druktest uit.	IT	Fare test in pressione.
F	Procédez à un essai de pression.	GR	Για τον έλεγχο της στεγανότητας της σύνδεσης πραγματοποιείστε δοκιμή υπό πίεση στον αγωγό για τυχόν διαρροές.
NO	Utfør trykktest på hele installasjonen, med minimum det aktuelle driftstrykk før anlegget dekkes til.Trykktestingen må ikke overstige 1,5 x PFA (max arbeidstrykk) i henhold til tabellen.	CZ	Provést tlakovou zkoušku.
SE	Utför tryckprovning.	HU	Hajtson végre nyomáspróbát.
DK	Gennemfør en trykprøvning.	RO	Se realizeaza un test de presiune.
FIN	Aseta painetesti.	PL	Przeprowadź próbę ciśnieniową.
PT	Efetuar teste de pressão.	RUS	Провести опрессовку.

WA4000/12-20/ML

16 PRESSURE TEST FAIL => REINSTALL FITTING. TEST OK => INSTALLATION FINISHED.

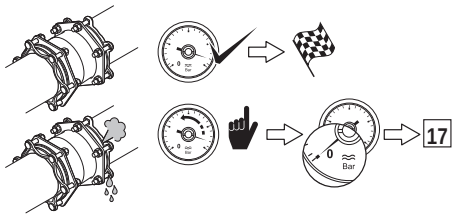

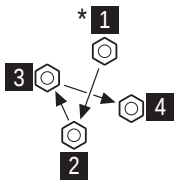

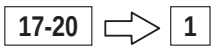

D	Falls die Dichtheitsprüfung eine Undichtheit aufzeigt, den Montagevorgang wiederholen - nach wiederholter, erfolgreicher Dichtheitsprüfung ist die Montage abgeschlossen.
NL	Druktest negatief => opnieuw installeren. Test OK => installatie gereed.
F	Mauvais résultat d'essai, réinstallez le raccord. Essai réussi, l'installation est terminée.
NO	Trykkprøving negativ => Re-installer kobling. Test OK => installasjon er utført.
SE	Tryckprovning falerar => Ommontera rördelen. Test OK => installation avslutad.
DK	Trykprøvning negativ => Re-installer kobling. Test OK => installationen er udført.
FIN	Paine testi hylätty=> asenna uudelleen. Testi OK => asennus suoritettu.
PT	Teste de pressão falhou => Voltar a instalar o acessório => Teste OK =>Instalação terminada.
ES	Test de Presion Fallo => Reinstalar el accesorio TEST OK=> Instalacion completada
IT	Se test negativo => Reinstallare. Se test positivo => Installazione finita.
GR	Σε περίπτωση που η εγκατάσταση αποτύχει και υπάρχει διαρροή στη σύνδεση => Επανα-εγκαταστήσετε το σύνδεσμο. Σε περίπτωση που η δεν παρατηρηθεί διαρροή στη σύνδεση=> η εγκατάσταση του συνδέσμου επί του αγωγού έχει ολοκληρωθεί με επιτυχία.
CZ	Tlaková zkouška není OK => tvarovku znovu namontovat. Tlaková zkouška OK => konec instalace.
HU	Nyomás próba sikertelen => végezze el újra az idom felhelyezését. Próba sikeres => felhelyezés befejezve.
RO	Daca testul de presiune esueaza => Se reinstaleaza fitingul. Daca rezultatul testului este OK => Instalare terminata.
PL	Nieudana próba => Ponowny montaż łącznika. Udana próba => montaż zakończony.
RUS	Опрессовка не пройдена => Установить фитинг снова. Опрессовка пройдена => Установка завершена.

WA4000/12-20/ML

17 DISASSEMBLY

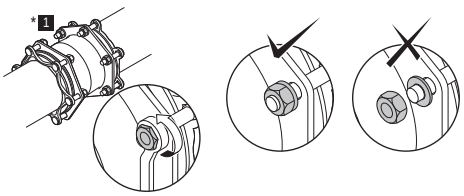

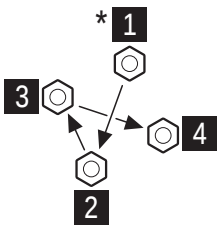

18 DISASSEMBLY

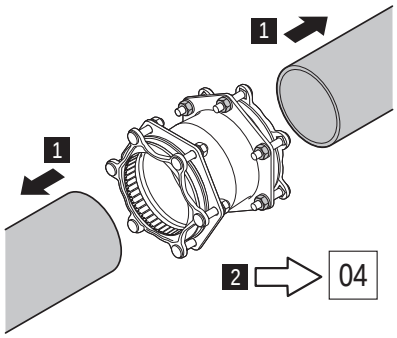

WA4000/12-20/ML

19
20

REUSE

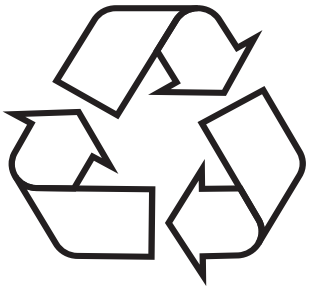

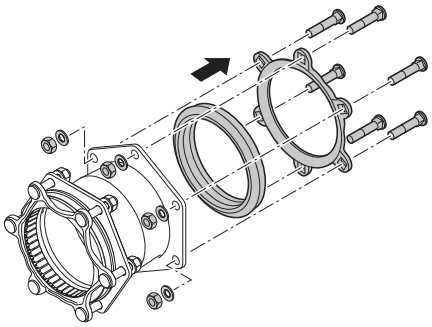

D	Wiederverwendung
NL	Hergebruik
F	Réutilisation
NO	Gjenbruk
SE	Återanvända
DK	Genbrug
FIN	Uudelleen käyttö
PT	Reutilização
ES	Reutilizar
IT	Riutilizzo
GR	Επαναχρησιμοποίηση
CZ	Opětovné použití
HU	Újra felhasználás
RO	Reutilizarea
PL	Ponowne użycie
RUS	Повторное использование

WA4000/12-20/ML

19

CHECK “FIKSERS” AND GASKET CONDITION.

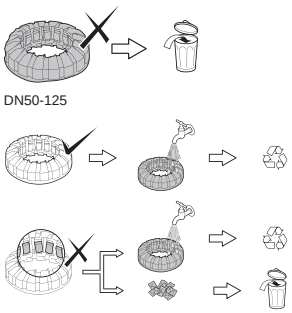

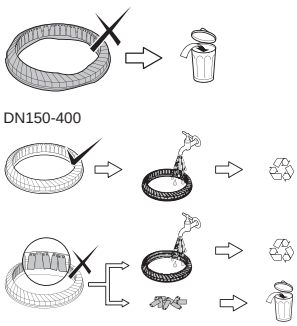

D	Die Dichtung und die Fikser überprüfen, ob diese in unbeschädigten, neuwertigem Zustand sind.
NL	Controleer de conditie van de “Fiksers” en de afdichtingsring.
F	Vérifiez l’état des “Fiksers” et du joint.
NO	Kontroller “Fikserne” og pakningens stand.
SE	Kontrollera “Fiksers” och tätningars kondition.
DK	Kontroller “Fiksernes” og tætningsringens tilstand.
FIN	Tarkista “Fikseri” ja tiiviste kunto.
PT	Ver o estado dos Fiksers” e do anel.
ES	Revisar los “Fiksers” y la junta.
IT	Controllare gli inserti antisfilo “Fiksers” e la guarnizione.
GR	Ελέγξτε την κατάσταση στην οποία βρίσκονται τα εξαρτήματα αγκύρωσης που διαθέτει ο σύνδεσμος ‘‘Fiksers’’ και τα παρεμβύσματα.
CZ	Zkontrolovat stav fixerů a těsnění.
HU	Ellenőrizze a “Fikser”-ek és a tömítés állapotát.
RO	Se verifica starea elementele de fixare “Fiksers” si a garniturilor.
PL	Sprawdź stan blaszek i uszczelki.
RUS	Проверить состояние “Fiksers” (металлических фиксаторов) и резинового уплотнения.

WA4000/12-20/ML

20 CHECK BOLTS, WASHERS AND NUTS.

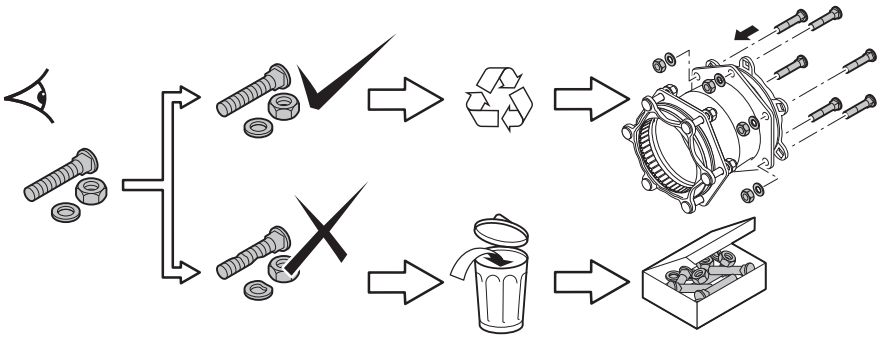

D	Die Schrauben, Unterlegscheiben und Muttern auf Gebrauchstauglichkeit überprüfen.
NL	Controleer bouten, moeren en onderlegringen.
F	Vérifiez l'état des vis, des rondelles et des écrous.
NO	Kontroller skiver, mutter og bolter.
SE	Kontrollera bultar, brickor och muttrar.
DK	Kontroller bolte, skiver og møtrikker.
FIN	Tarkista lukko, prikka ja mutteri.
PT	Ver o estado dos parafusos, arruelas e porcas.
ES	Revisar los tornillos, arandelas y tuercas.
IT	Controllare viti, dadi e rondelle.
GR	Ελέγξτε την κατάσταση των βιδών, των παξιμαδιών και των περικοχλίων αν έχουν εφαρμόσει σωστά.
CZ	Zkontrolovat šrouby, podložky a matky.
HU	Ellenőrizze a csavarokat, anyákat és alátéteket.
RO	Se verifica suruburile si piulitele.
PL	Sprawdź śruby, nakrętki i podkładki.
RUS	Проверить наличие болтов, шайб и гаек.

WA4000/12-20/ML

21 22 23 24 25 INSTALLATION/REMOVAL OF "FIKSERS"

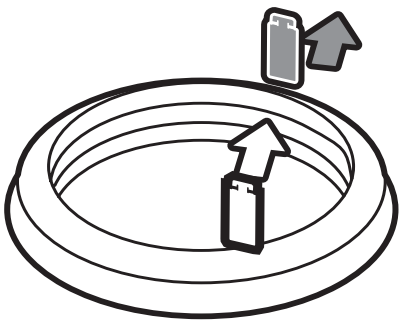

D	Montage/Demontage der Fikser
NL	Fiksers monteren/verwijderen
F	Mise en place / Dépose des "Fiksers"
NO	Montering/fjerning av "Fiksere"
SE	Installation/borttagande av "Fiksers"
DK	Installation/demontering af fiksers
FIN	"Fikserien" asennus / poisto
PT	Instalação/Retirar los Fikser
ES	Instalación/Retirar los Fikser
IT	Installazione/rimozione "Fiksers"
GR	Εγκατάσταση/απομάκρυνση των εξαρτημάτων αγκύρωσης ''Fiksers''
CZ	Instalace/odstranění fixerů
HU	"Fikser"-ek behelyezése/eltávolítása
RO	Intalarea/Indepartarea elementelor de fixare "Fiksers"
PL	Montaż/demontaż blaszek "Fiksers"
RUS	Установка/снятие фиксаторов

WA4000/12-20/ML

21

DN50-125

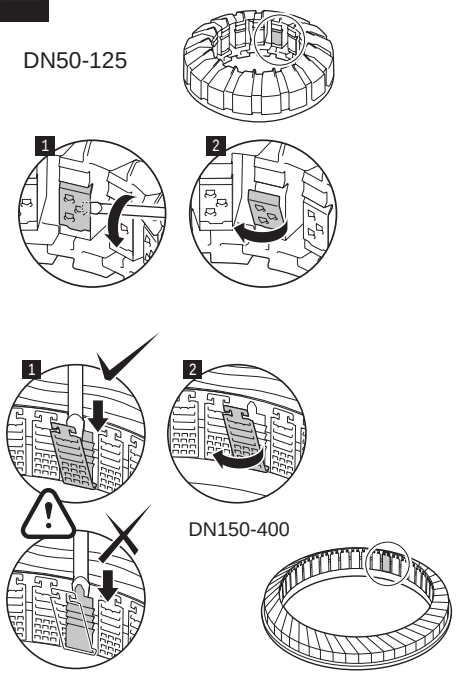

22

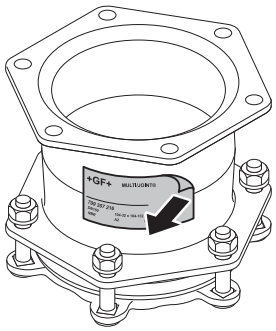

WA4000/12-20/ML

23

CHECK TABLE FOR CORRECT NUMBER OF “FIKSERS” PER DN.

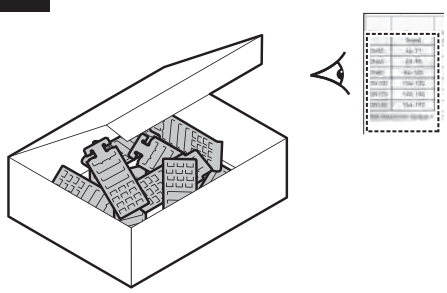

DN	Uni/Fikser
DN50	16
DN65	19
DN80	22
DN100	15
DN125	18
DN150	40

DN	Uni/Fikser
DN200	48
DN225	45
DN250	53
DN300	63
DN350	68
DN400	74

D	Die Anzahl (laut Tabelle) der Fikser überprüfen.
NL	Zie de tabel voor juiste aantal “Fiksers” per DN.
F	Vérifiez dans le tableau le nombre exact de “Fiksers” à installer par DN.
NO	Sjekk tabell vedrørende antall “Fiksere” mot DN.
SE	Kontrollera i tabellen för korrekt antal “Fiksers” per DN.
DK	Kontroller det korrekte antal “Fiksers” pr. DN med tabellen.
FIN	Tarkista taulukosta oikea “Fikserien” lukumäärä per DN.
PT	Ver na tabela o numero de “Fiksers” para cada diâmetro.
ES	Ver Tabla para instalar el numero apropiado de Fiksers por DN.
IT	Controllare in tabella il numero di “Fiksers” per DN.
GR	Ελέγξτε από τον πίνακα αν ο σύνδεσμος διαθέτει τον κατάλληλο αριθμό εξαρτημάτων αγκύρωσης “Fiksers” ανάλογα με τη διάμετρό του (DN).
CZ	V tabulce zkontrolovat správný počet fixerů v závislosti na DN.
HU	Ellenőrizze a táblázatot a megfelelő számú “Fikser” per DN érdekében.
RO	Se verifica in tabel numarul recomandat de elemente de fixare “Fiksers” pentru un anumit DN
PL	Odczytaj z tabeli liczbę blaszek przypadających na daną wartość DN.
RUS	Проверить по таблице количество фиксаторов для данного DN.

WA4000/12-20/ML

24 CHECK IF “FIKSERS” (METAL GRIPPERS) POSITION IS CORRECT.

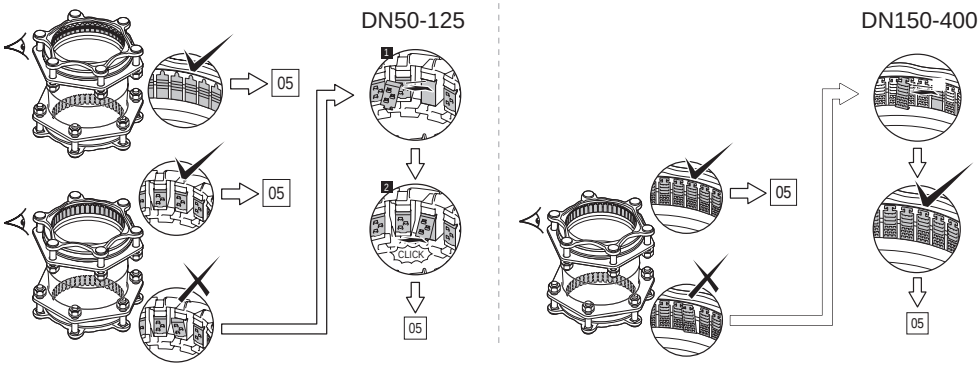

D	Sicherstellen, dass alle Fikser richtig positioniert sind.
NL	Controleer de juiste positie van de “Fiksers”.
F	Assurez-vous que les “Fiksers” (les mors métalliques) sont correctement positionnés.
NO	Kontroller at “Fikserne” er i riktig possisjon.
SE	Kontrollera om “Fiksers” position är korrekt.
DK	Kontroller om “Fikernes” placering er korrekt.
FIN	Tarkista “Fikseri”, että asento on oikein.
PT	Ver se a posição dos “Fiksers” é correcta.
ES	Revise si los “Fiksers” se encuentran en la posicion correcta.
IT	Controllare gli inserti antisfilo “Fiksers” sono OK.
GR	Ελέγξτε αν τα εξαρτήματα αγκύρωσης που διαθέτει ο σύνδεσμος “Fiksers” έχουν αγκυρώσει σωστά πάνω στον αγωγό.
CZ	Zkontrolovat správnou polohu fixerů.
HU	Ellenőrizze, hogy a “Fikser”-ek megfelelő helyzetben vannak-e.
RO	Se verifica daca pozitia elementelor de fixare “Fiksers” este corecta.
PL	Sprawdź poprawność ułożenia blaszek.
RUS	Убедиться в правильности установки “Fiksers” (металлических фиксаторов).

WA4000/12-20/ML

25 ATTACH NEW STICKER.

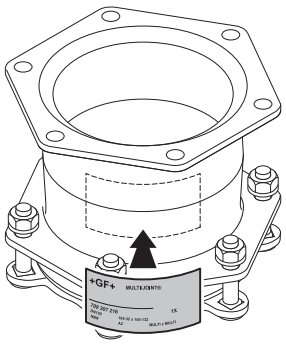

D	Neues Etikett am Fittingskörper anbringen.
NL	Plaats een nieuwe sticker.
F	Collez la nouvelle étiquette.
NO	Monter nytt klistremerke.
SE	Sätt på ny sticker.
DK	Påsæt ny etiket.
FIN	Attach new sticker.
PT	Colocar etiqueta nova.
ES	Adjuntar una nueva pegatina.
IT	Attaccare.
GR	Επικολλήστε καινούριο αυτοκόλλητο σήμανσης στον αγωγό μετά τη τοποθέτηση.
CZ	Nalepit nový štítek.
HU	Ragasszon fel új címkét.
RO	Se lipeste o eticheta noua.
PL	Przylep nową naklejkę.
RUS	Нанести новую наклейку.

WA4000/12-20/ML

User manual MULTI/JOINT® 3000 Plus DN425 - DN600

Georg Fischer Waga N.V.

+GF+

GB	User Manual
D	Montageanleitung
NL	Montagehandleiding
F	Manuel d'instruction
NO	Brukermanual
SE	Användarmanual
DK	Montagevejledning
FIN	Käyttömanuaali
ES	Manual de instalacion
PT	Manual de instalação
IT	Manuale d'uso
RO	Manualul utilizatorului
CZ	Návod k montáži
GR	Εγχειρίδιο χρήσης
HU	Szerelési utasítás
RUS	Руководство по установке
PL	Instrukcja Obsługi

MULTI/JOINT® 3000 Plus

DN425-DN600

Georg Fischer Waga N.V.-P.O.Box 290-
8160 AG Epe-The Netherlands-www.waga.nl

DN425-DN600/12-20/ML

01

FITTING CHOICE

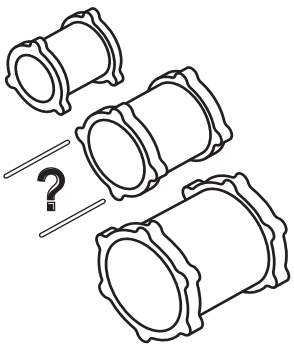

D	Kupplung auswählen	ES	Elegir union
NL	Keuze koppeling	IT	Scelta del giunto
F	Choisir le raccord	GR	Επιλογή συνδέσμου
NO	Valg av kobling	CZ	Výběr spojky
SE	Kopplings val	HU	Idom kiválasztása
DK	Valg af kobling	RO	Alegerea cuplei
FIN	Muhvi vaihtoehdot	PL	Wybór łącznika
PT	Escolha do tipo de ligação	RUS	Выбор фитинга

DN425-DN600/12-20/ML

01 CHECK TABLE IF CHOSEN FITTING MATCHES PIPE OD.

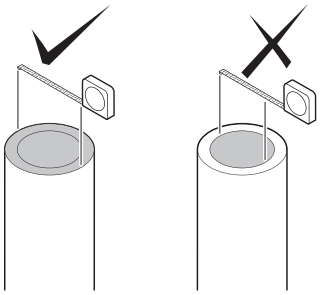

DN	Range (mm)
DN425	432 – 464
DN450	450 – 482
DN475	481 – 513
DN500	500 – 532
DN550	548 – 580
DN600	605 – 637

D	Die Rohraussendurchmesser überprüfen und mit der Tabelle vergleichen.
NL	Kies de juiste koppeling m.b.v. de tabel.
F	Vérifiez sur le tableau si le raccord couvre bien le diamètre extérieur du tube.
NO	Sjekk med tabell at koblingen stemmer overens med utvendig diameter rør.
SE	Kontrollera om vald rördel stämmer mot rörets yt-terdiameter.
DK	Kontroller med tabellen om den valgte kobling passer til rørdiameteren.
FIN	Tarkista taulukosta jos valitut asennukset sopivat putkelle QD.
PT	Ver na tabela se os acessórios estão de acordo com o diâmetro exterior dos tubos.
ES	Ver tabla anexa para unir distintos diametros exteriores.
IT	Controllare sulla tabella se il giunto è idoneo al d.e. del tubo.
GR	Με βάση το πίνακα μεγεθών, επιβεβαιώστε ότι ο σύνδεσμος είναι κατάλληλος για τη συγκεκριμένη διάμετρο αγωγού στον οποίο πρόκειται να τοποθετηθεί.
CZ	V tabulce zkontrolovat použitelnost tvarovky v daném rozsahu průměrů.
HU	Ellenőrizze, hogy a kiválasztott idom megfelel-e a cső külső átmérőjéhez.
RO	Se verifica in tabel daca fitingul ales corespunde Dext al tevii.
PL	Sprawdź w tabeli czy łącznik pasuje do zewnętrznej średnicy rury.
RUS	Проверить по таблице совместимость фитинга с трубой.

DN425-DN600/12-20/ML

02 03 04 PREPARE FITTING FOR INSTALLATION

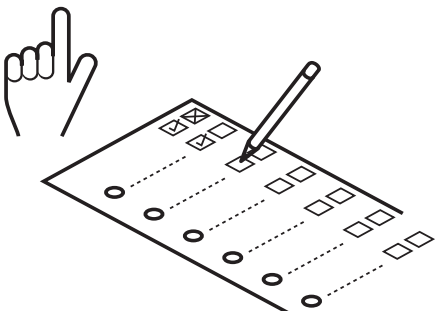

D	Kupplung für die Montage vorbereiten
NL	Montageklaar maken
F	Préparez le raccord pour l'installation
NO	Forbredelse av kobling
SE	Förbered kopplingen för installation
DK	Klargør koblingen til installationen
FIN	Valmista muhvi asennusta varten
PT	Preparação da ligação
ES	Preparar union para instalacion
IT	Preparazione per l'installazione
GR	Προετοιμασία συνδέσμου για τοποθέτηση
CZ	Příprava spojky pro instalaci
HU	Idom előkészítése a felhelyezésre
RO	Pregatirea cuplei pentru instalare
PL	Przygotowanie łącznika do instalacji
RUS	Подготовка фитинга к установке

DN425-DN600/12-20/ML

02

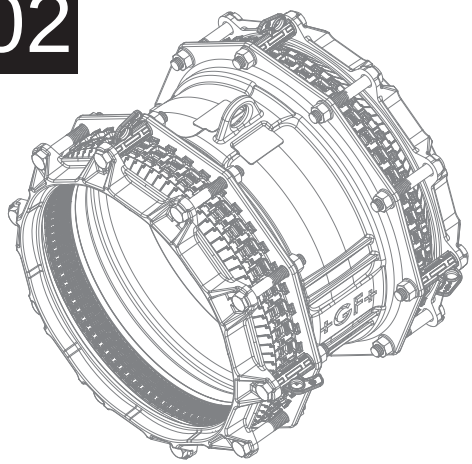

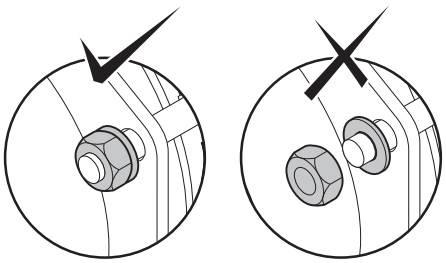

03

DN425-DN600/12-20/ML

04

CHECK IF “FIKSERS” (METAL GRIPPERS) POSITION IS CORRECT.

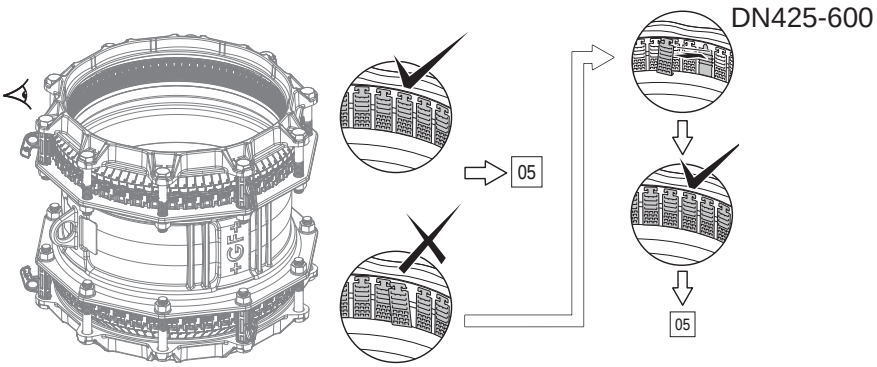

D	Sicherstellen, dass alle Fikser richtig positioniert sind.
NL	Controleer de juiste positie van de “Fiksers”.
F	Assurez-vous que les “Fiksers” (les mors métalliques) sont correctement positionnés.
NO	Kontroller at “Fikserne” er i riktig possisjon.
SE	Kontrollera om “Fiksers” position är korrekt.
DK	Kontroller om “Fikernes” placering er korrekt.
FIN	Tarkista “Fikseri”, että asento on oikein.
PT	Ver se a posição dos “Fiksers” é correto.
ES	Revise si los “Fiksers” se encuentran en la posicion correcta.
IT	Controllare gli inserti antisfilo “Fiksers” sono OK.
GR	Ελέγξτε αν τα εξαρτήματα αγκύρωσης που διαθέτει ο σύνδεσμος “Fiksers” έχουν αγκυρώσει σωστά πάνω στον αγωγό.
CZ	Zkontrolovat správnou polohu fixerů.
HU	Ellenőrizze, hogy a “Fikser”-ek megfelelő helyzetben vannak-e.
RO	Se verifica daca pozitia elementelor de fixare “Fiksers” este corecta.
PL	Sprawdź poprawność ułożenia blaszek.
RUS	Убедиться в правильности установки “Fiksers” (металлических фиксаторов).

DN425-DN600/12-20/ML

05 06 07 08 09

PIPE PREPARATION

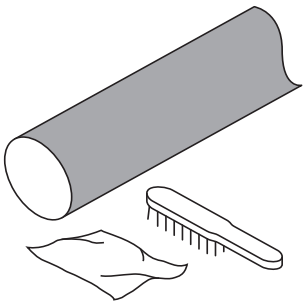

D	Zu verbindende Rohre vorbereiten
NL	Voorbereiden buis
F	Préparez les tubes
NO	Forbredelse av rør
SE	Rörberedning
DK	Klargøring af røret
FIN	Putken esivalmistus
PT	Preparação do tubo
ES	Preparacion de la tuberia
IT	Preparazione tubazione
GR	Προετοιμασία Αγωγού
CZ	Příprava trubky
HU	Cső előkészítése
RO	Pregatirea conductei
PL	Przygotowanie rury
RUS	Подготовка труб

DN425-DN600/12-20/ML

05 REMOVE ALL RUST, DIRT, BURRS, DAMAGES AND ALL FINISHING LAYERS FROM THE PIPE. MOUNT ON MEDIUM CARRYING PIPE MATERIAL ONLY.

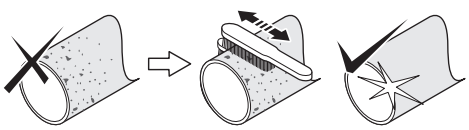

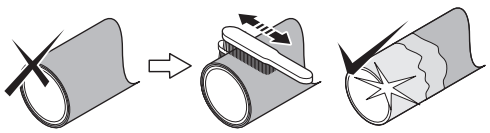

D	Von der drucktragenden Rohroberfläche allen Rost, Grat, Schmutz, Schäden und alle Beschichtungen entfernen.
NL	Verwijder alle roest, vuil, bramen, beschadigingen en buislagen. Monteer alleen op de mediumvoerende buis.
F	Eliminez la rouille, la saleté, les bourrelets de soudures, les défauts de surface et toutes les couches de finition du tube. Assemblez seulement sur le matériau principal du tube.
NO	Fjern all rust, løs overflate samt skader på materialet og overflatebehandling.
SE	Avlägsna all rost, smuts, grader och eventuell ytbehandling från röret. Montera endast på mediabärande rörmaterial.
DK	Fjern al rust, snavs, spåner, beskadigelser og alle belægninger på røret. Monter kun på selve det mediebærende rør.
FIN	Poista kaikki ruoste, lika, taite, vauriot ja kasaumat putkesta. Asenna ainoastaan keskivahvalle putkelle.
PT	Remover oxidação, sugeira, rebarbas, e revestimento do tubo.
HU	Távolítson el minden rozsdát, szennyeződést, sorját, sérüléseket és minden fedőréteget a csőről. Csak közvetlenül a közeg szállító csőanyagra helyezze fel az idomot.
ES	Retirar toda la suciedad, polvo, daños y etiquetas de la tuberia. Montar solamente entre tubos.
IT	Rimuovere sporcizia, polvere, intagli e gli strati superficiali della tubazione. Il montaggio deve avvenire sullo strato a contatto del fluido trasportato.
GR	Καθαρίστε όλα τα οξειδωμένα τμήματα, τις επικαθίσεις, τις παραμορφώσεις και τις υλικές βλάβες της επιφάνειας του αγωγού καθώς και τις επιστρώσεις του αγωγού μέχρι τον αγωγό μεταφοράς του υλικού.
CZ	Odstranit všechny nečistoty, rez, otřepy a všechny dodatečné vrstvy z povrchu trubky. Montovat pouze na trubky určené pro transport médií.
RO	Indepartati praful, crestaturile, murdaria, defectele precum si toate straturile de acoperire de pe teava. Se monteaza doar pe materialul conductei.
PL	Usuń wszelkiego rodzaju uszkodzenia, zabrudzenia, zadrapania, rdzę i wierzchnie warstwy na długości rury pokrytej przez łącznik.
RUS	Удалить любые загрязнения, ржавчину, задиры и наплывы, а так же покрытия с поверхности трубы. Устанавливать только на основной материал трубы.

DN425-DN600/12-20/ML

06 USE AN (BY GF) APPROVED SCRAPING TOOL.

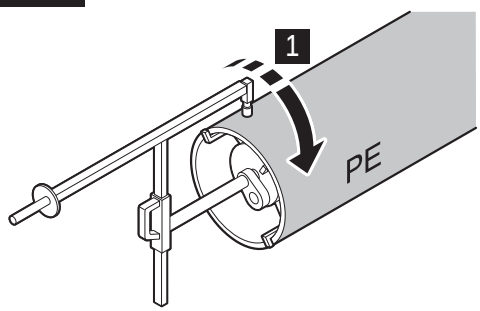

GAS / GAZ

D	Für PE-Rohre ist ein GF Schälgerät zu verwenden.
NL	Gebruik een door GF goedgekeurde schiller.
F	Utilisez un grattoir mécanique approuvé par GF.
NO	Bruk skrapeverktøy godkjent av GF.
SE	Använd ett (av GF) godkänt skrapverktyg.
DK	Brug et (af GF) godkendt skrabeværktøj.
FIN	Käytä (GF) hyväksymää karhennus työkalua.
PT	Usar uma ferramenta (GF) adequada.
ES	Utilizar un rascador circular GF.
IT	Utilizzare in raschiatore approvato da GF.
GR	Για τις εργασίες καθαρισμού και λείανσης χρησιμοποιείστε το κατάλληλο (από την GF) εργαλείο.
CZ	Použít škrabku (schválenou GF).
HU	Használjon (GF által jóváhagyott) hántoló szerszámot.
RO	Se va utiliza un dispozitiv de raschetat recomandat (de GF).
PL	Użyj skrobaka (GF) do przygotowania rury.
RUS	Использовать только разрешенный (компанией GF) инструмент для зачистки.

DN425-DN600/12-20/ML

07 CHECK TABLE FOR MINIMUM INSERTION DEPTH (X).

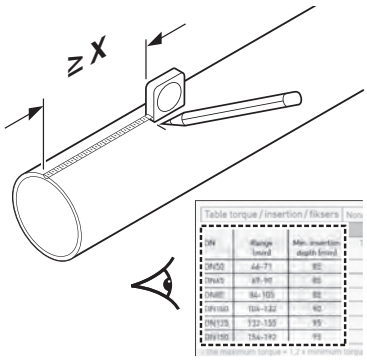

DN	X Min. insertion depth (mm)*
DN425	160
DN450	
DN475	
DN500	
DN550	
DN600	170

** For maximum joint gap information; see our technical manual.*

D	Aus der Tabelle die Einstecktiefe entnehmen (X).
NL	Zie de tabel voor de minimale insteekdiepte (X).
F	Vérifiez sur le tableau la profondeur d'insertion (X) correcte du tube.
NO	Sjekk med tabell for korrekt innstikksdybde (X).
SE	Kontrollera i tabellen korrekt insticksdjup (X).
DK	Kontroller med tabellen for korrekt indstiksdybde (X).
FIN	Tarkista taulukosta oikea asennus syvyys (X).
PT	Ver na tabela a profundidade (X) de inserção do tubo no acessório.
ES	Ver tabla para la profundidad de inserción minima (X).
IT	Controllare sulla tabella la profondità di inserimento (X).
GR	Συμβουλευτείτε τον πίνακα για την υπόδειξη του κατάλληλου βάθους εισαγωγής (X) του συνδέσμου στον αγωγό.
CZ	Zkontrolovat v tabulce správnou hloubku zasunutí (X).
HU	Ellenőrizze a táblázatot a megfelelő betolási mélység érdekében (X).
RO	Se verifica in tabel adancimea corecta de inserare (X).
PL	Korzystając z tabeli określ głębokość nasunięcia łącznika (X).
RUS	Проверить по таблице значение глубины ввода трубы (X).

DN425-DN600/12-20/ML

08

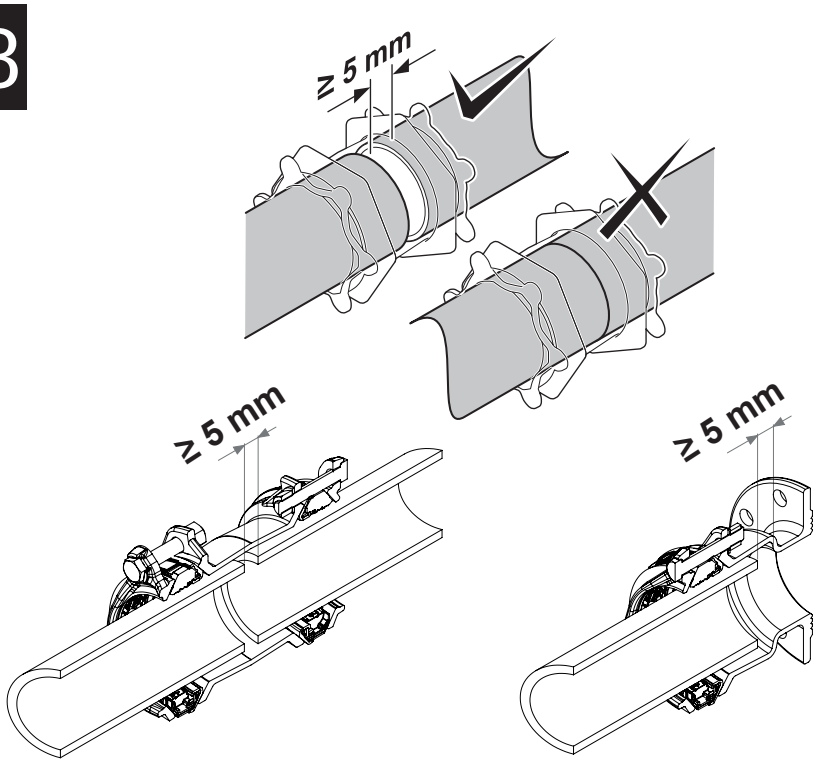

DN425-DN600/12-20/ML

09

APPLY SUITABLE GREASE

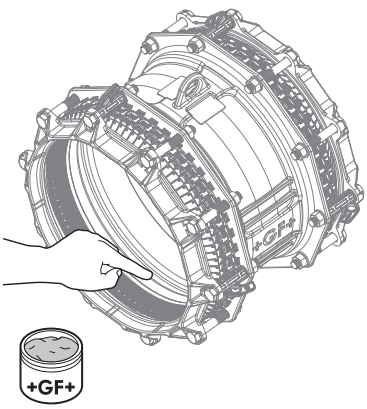

GAS / GAZ

D	Für die Gasanwendung den Dichtungsbereich ausreichend mit Gleitmittel versehen.
NL	Smeer de afdichting in met een geschikt glijmiddel.
F	Lubrifiez le bague de joint avec une graisse appropriée.
NO	Bruk egnet glidemiddel.
SE	Applicera lämpligt smörjmedel.
DK	Påfør egnet glidemiddel.
FIN	Lisää soveltuva rasva.
PT	Aplicar lubrificante adequado (nunca de origem mineral).
ES	Aplicar la grasa correspondiente a la junta.
IT	Applicare lubrificante opportuno.
GR	Τοποθετήστε κατάλληλη ποσότητα λιπαντικής ουσίας στα μηχανικά μέρη του συνδέσμου.
CZ	Aplikovat vhodné mazivo.
HU	Használjon megfelelő kenőanyagot.
RO	Se aplica lubrifiant.
PL	Nałóż warstwę smaru.
RUS	Использовать только подходящую смазку.

DN425-DN600/12-20/ML

10 11 12 13a 13b 14

INSTALLATION

EN:
When manoeuvring the product out of the packaging to the pipe surface, please ensure that the proper lifting procedures are followed. Ensure that local safety and lifting procedures are adopted. All lifting should be done by qualified personnel, with approved equipment.

NL:
Zorg ervoor dat bij het manoeuvreren van het product vanuit de verpakking naar het buisoppervlak, de juiste hijsprocedures in acht worden genomen. U dient de lokale veiligheids- en hijsvoorschriften op te volgen. Het hijsen van producten dient te gebeuren met gekeurde hijsmiddelen en door gekwalificeerd personeel.

D:
Bitte stellen Sie eine ordnungsgemäße manuelle Handhabung sicher, wenn das Produkt aus seiner Verpackung entnommen, transportiert und am Rohr angebracht wird. Ist der Einsatz mechanischer Hebezeuge erforderlich, so muss gewährleistet werden, dass sichere Arbeitsverfahren angewendet werden, geprüfte und anerkannte Hebezeuge verwendet werden und von qualifiziertem Personal durchgeführt werden.

DU	Montage	ES	Instalación
NL	Montage	IT	Installazione
F	Installation	GR	Installazione
NO	Montering	CZ	Instalace
SE	Installation	HU	Felhelyezés
DK	Installation	RO	Instalarea
FIN	Asennus	PL	Montaż
PT	Instalação	RUS	Установка

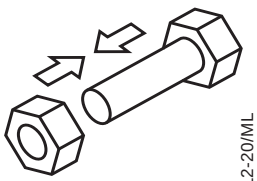

DN425-DN600/12-20/ML

10

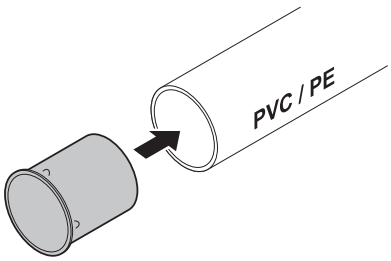

(approved by Georg Fischer Waga N.V.)

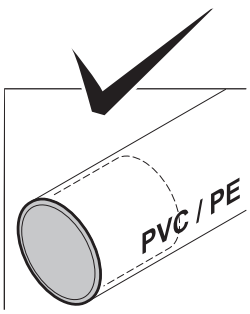

11 NOMINAL ANGULARITY*

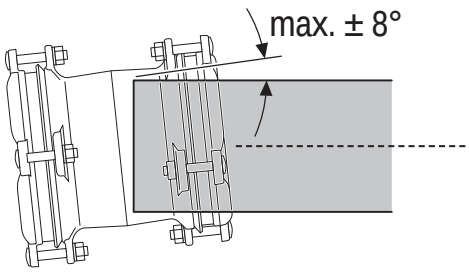

* based on the middle of the range

DN425-DN600/12-20/ML

12 SLIDE THE MULTI/JOINT® 3000 PLUS ONTO PIPE END AND REMOVE TRANSPORT CLIP!

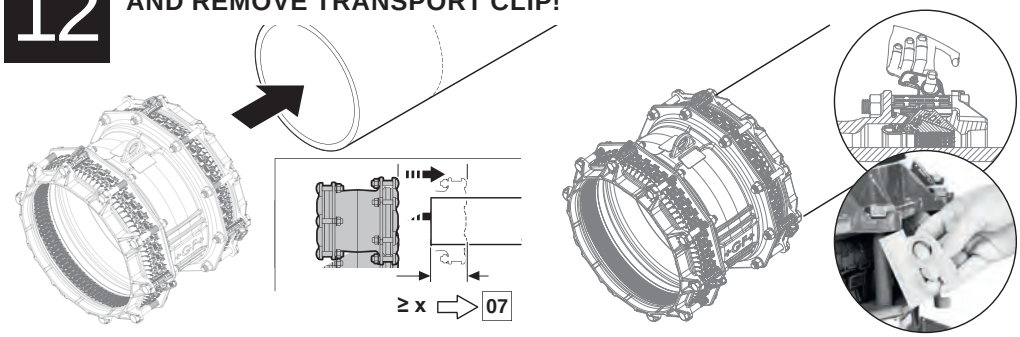

D	Den MULTI/JOINT® 3000 Plus auf das Rohrende schieben und den Transportclip entfernen!
NL	Schuif de MULTI/JOINT® 3000 Plus op het buiseinde en verwijder de transportclips!
F	Faites glisser le MULTI/JOINT® 3000 Plus sur l'extrémité du tuyau et retirez le clip de transport!
NO	Skli MULTI/JOINT® 3000 Plus muffe innpå rørende og deretter fjern trasportpinnen.
SE	Skjut MULTI/JOINT® 3000 Plus kopplingen på röret och ta bort transportsäkringarna (clip)!
DK	Skub MULTI/JOINT® 3000 Plus på røret og fjern transport-beslaget!
FIN	Liu'uta MULTI/JOINT® 3000 Plus putken päälle ja poista kuljetus klipsi!
PT	Deslize o MULTI/JOINT® 3000 Plus na extremidade do tubo e remover o clipe de transporte!
ES	Deslice el MULTI/JOINT® 3000 Plus sobre el extremo del tubo y retire el clip de transporte!
IT	Inserire MULTI/JOINT® 3000 Plus sul tubo e succes-sivamente rimuovere i fermi per il trasporto!
GR	Εισαγετε το multi/joint® 3000 plus στο ακρο του αγωγου και αφαιρεστε το κουμπωμα μεταφορασ!
CZ	Nasunout tvarovku MULTI/JOINT® 3000 Plus na konec trubky a teprve potom odstranit oranžové vymezovací díly!
HU	Csúsztassa a MULTI/JOINT® 3000 Plus kötőidomot a csővégre, és távolítsa el a szállítási rögzítőelemet!
RO	Introduceti piesa MULTI/JOINT® 3000 Plus pe capatul conductei si inlaturati siguranta pentru transport!
PL	Nasuń łącznik MULTI/JOINT® 3000 Plus na rurę a następnie zdejmij zabezpieczenie transportowe!
RUS	Установите MULTI/JOINT® 3000 Plus на конец трубы и удалите транспортировочный хомут!

DN425-DN600/12-20/ML

13a TIGHTEN THE BOLTS WITH THE CORRECT TORQUE.

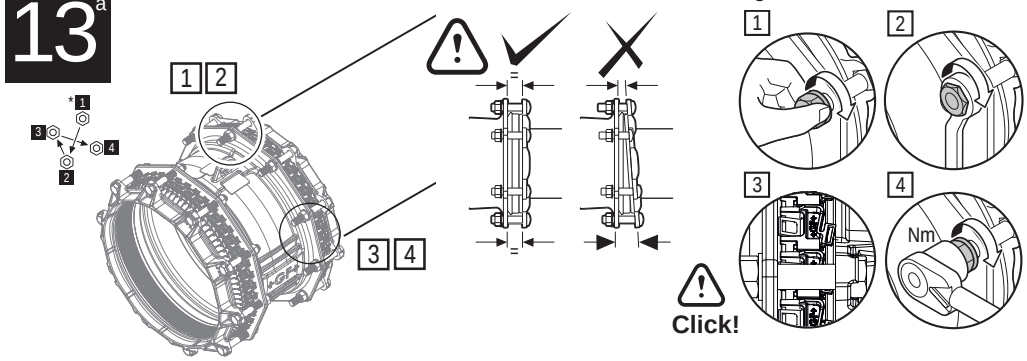

D	Der Tabelle das richtige Schraubendrehmoment entnehmen. Die Verwendung eines Drehmomentschlüssels ist zwingend erforderlich.
NL	Zie de tabel voor het juiste aandraaimoment.
F	Vérifiez dans les tableaux le couple de serrage à respecter.
NO	Mutrene strammes i kryss, da man skal holde samme avstand mellom koblingshus og trykkflens(gland). Etter-stram med en momentnøkkel ihht. Momenttabell.
SE	Kontrollera i tabell korrekt åtdragningsmoment.
DK	Det rigtige tilspændingsmoment findes i tabellen.
FIN	Tarkista taulukosta oikea vääntömomentti.
PT	Ver na tabela a força de aperto.
ES	Ver tabla para el par de apriete.
IT	Controllare la tabella per il serraggio.
GR	Συμβουλευτείτε τον πίνακα για την επιλογή της κατάλληλης στρεπτικής ροπής που θα πρέπει να εφαρμοστεί στον σύνδεσμο, κατά την διαδικασία της σύσφιξης του στον αγωγό.
CZ	Zkontrolovat v tabulce správný utahovací moment.
HU	Ellenőrizze a táblázatot a megfelelő nyomaték érdekében.
RO	Se verifica in tabel valoarea momentului de stangere.
PL	Odczytaj z tabeli odpowiedni moment dokręcania śrub.
RUS	Проверить по таблице соответствующий момент затяжки болтов.

DN425-DN600/12-20/ML

13b CHECK TABLE FOR INSTALLATION TORQUE AND PRESSURE RATING**.

RESTRAINT

MULTI/JOINT® 3000 Plus **with Fikser**

(S)St, CU, DCI, GCI, AC*, GRP*, PVC, PE, PEX, PP-B, PP-H, ABS
(* NO guarantee as quality varies!)

DN	Torque (Nm)	MOP gas (bar)	PFA water (bar)
DN425	140	5	10
DN450			
DN475			
DN500			
DN550			
DN600			

NON-RESTRAINT

MULTI/JOINT® 3000 Plus **without Fikser**

(S)St, CU, DCI, GCI, AC, GRP, PVC, PE, PEX, PP-B, PP-H, ABS

DN	Torque (Nm)	MOP gas (bar)	PFA water (bar)
DN425	140	8	16
DN450			
DN475			
DN500			
DN550			
DN600			

**** ALL FITTINGS PN16 RATED, SEE RESTRAINT TABLE FOR PULL OUT RESISTANT FORCES**

DN425-DN600/12-20/ML

14 ≤ 0 ºC ONLY ON PE PIPE UNDER FREEZING CONDITIONS, APPLY TORQUE (PRESCRIBED UNDER 13) ONE MORE TIME AFTER 30 MINUTES.

PE

≤ 0 ºC → 30 min. → 13

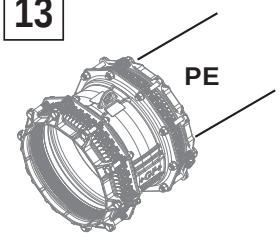

D Nur für Einsatz auf PE Rohren bei Temperaturen ≤ 0, das unter 13 ermittelte Schraubendrehmoment nach 30 Minuten noch einmal aufbringen.

NL Alleen bij montage op PE bij temperaturen onder 0, het (onder 13) voorgeschreven draaimoment na 30 minuten nog eenmaal aanbrengen.

F Répetez l'étape 13 après 30 minutes seulement sur des tubes en PE en temps glacial.

≥ 0 ºC → 15

DN425-DN600/12-20/ML

15
16

TESTING

$P_{max} \leq 1{,}5 \times PFA$

D	Dichtheitsprüfung	ES	Probar
NL	Testen	IT	Test
F	Essais	GR	Έλεγχος/ δοκιμές
NO	Trykktesting	CZ	Zkouška
SE	Testa	HU	Tesztelés
DK	Prøvning	RO	Testarea
FIN	Testi	PL	Testowanie
PT	Teste	RUS	Испытание

DN425-DN600/12-20/ML

15

CONDUCT A PRESSURE TEST.

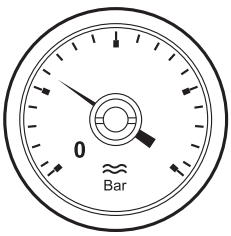

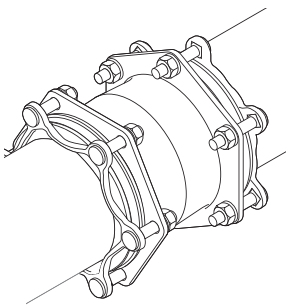

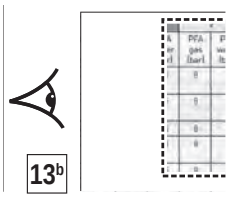

D	Dichtheitsprüfung durchführen.	ES	Realizar un test de presión.
NL	Voer een druktest uit.	IT	Fare test in pressione.
F	Procédez à un essai de pression.	GR	Για τον έλεγχο της στεγανότητας της σύνδεσης πραγματοποιείστε δοκιμή υπό πίεση στον αγωγό για τυχόν διαρροές.
NO	Utfør trykktest på hele installasjonen, med minimum det aktuelle driftstrykk før anlegget dekkes til.Trykktestingen må ikke overstige 1,5 x PFA (max arbeidstrykk) i henhold til tabellen.	CZ	Provést tlakovou zkoušku.
SE	Utför tryckprovning.	HU	Hajtson végre nyomáspróbát.
DK	Gennemfør en trykprøvning.	RO	Se realizeaza un test de presiune.
FIN	Aseta painetesti.	PL	Przeprowadź próbę ciśnieniową.
PT	Efetuar teste de pressão.	RUS	Провести опрессовку.

DN425-DN600/12-20/ML

16 IF PRESSURE TEST FAILS: REINSTALL FITTING. TEST OK ⇨ INSTALLATION FINISHED.

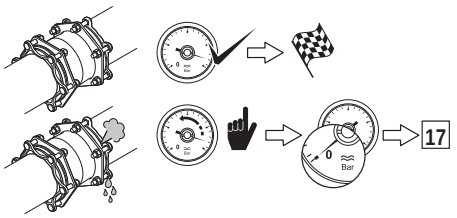

17-20 ⇨ 01

D	Falls die Dichtheitsprüfung eine Undichtheit aufzeigt, den Montagevorgang wiederholen - nach wiederholter, erfolgreicher Dichtheitsprüfung ist die Montage abgeschlossen.
NL	Druktest negatief → opnieuw installeren. Test OK → installatie gereed.
F	Mauvais résultat d'essai, réinstallez le raccord. Essai réussi, l'installation est terminée.
NO	Trykkprøving negativ → Re-installer kobling. Test OK → installasjon er utført.
SE	Tryckprovning falerar → Ommontera rördelen. Test OK → installation avslutad.
DK	Trykprøvning negativ → Re-installer kobling. Test OK → installationen er udført.
FIN	Paine testi hylätty → asenna uudelleen. Testi OK → asennus suoritettu.
PT	Teste de pressão falhou → Voltar a instalar o acessório → Teste OK → Instalação terminada.
ES	Test de Presion Fallo → Reinstalar el accesorio TEST OK → Instalacion completada
IT	Se test negativo → Reinstallare. Se test positivo → Installazione finita.
GR	Σε περίπτωση που η εγκατάσταση αποτύχει και υπάρχει διαρροή στη σύνδεση → Επανα-εγκαταστήσετε το σύνδεσμο. Σε περίπτωση που η δεν παρατηρηθεί διαρροή στη σύνδεση → η εγκατάσταση του συνδέσμου επί του αγωγού έχει ολοκληρωθεί με επιτυχία.
CZ	Tlaková zkouška není OK → tvarovku znovu namontovat. Tlaková zkouška OK → konec instalace.
HU	Nyomás próba sikertelen → végezze el újra az idom felhelyezését. Próba sikeres → felhelyezés befejezve.
RO	Daca testul de presiune esueaza → Se reinstaleaza fitingul. Daca rezultatul testului este OK → Instalare terminata.
PL	Nieudana próba → Ponowny montaż łącznika. Udana próba → montaż zakończony.
RUS	Опрессовка не пройдена → Установить фитинг снова. Опрессовка пройдена → Установка завершена.

DN425-DN600/12-20/ML

17 DISASSEMBLY

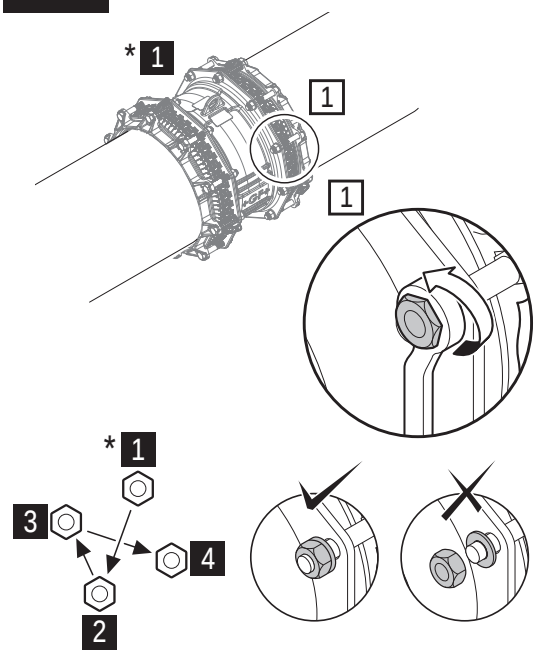

18 DISASSEMBLY

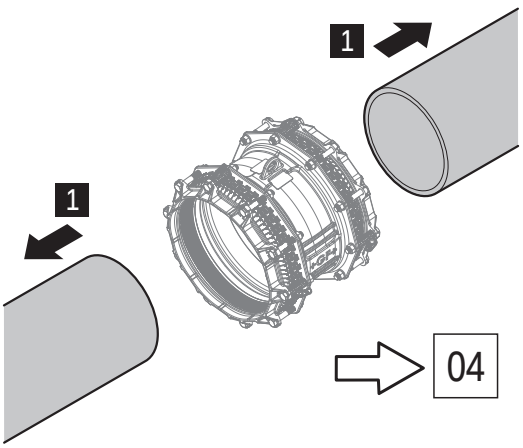

DN425-DN600/12-20/ML

19
20

REUSE

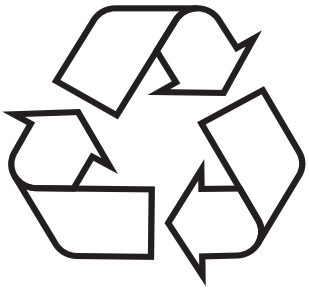

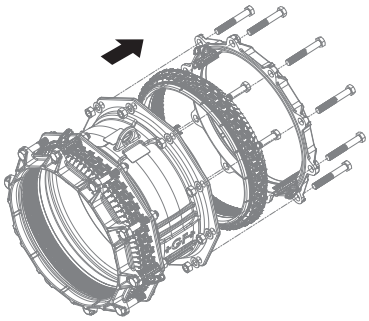

** For replacing the Uni/Fiksring of MULTI/JOINT® 3000 Plus DN425 – DN600 see our user manual:*

D	Wiederverwendung
NL	Hergebruik
F	Réutilisation
NO	Gjenbruk
SE	Återanvända
DK	Genbrug
FIN	Uudelleen käyttö
PT	Reutilização
ES	Reutilizar
IT	Riutilizzo
GR	Επαναχρησιμοποίηση
CZ	Opětovné použití
HU	Újra felhasználás
RO	Reutilizarea
PL	Ponowne użycie
RUS	Повторное использование

DN425-DN600/12-20/ML

19

CHECK “FIKSERS” AND GASKET CONDITION.

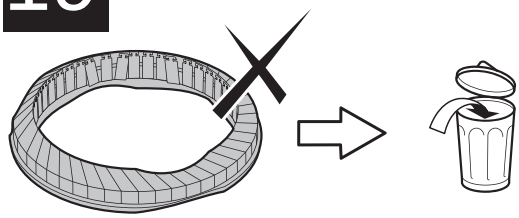

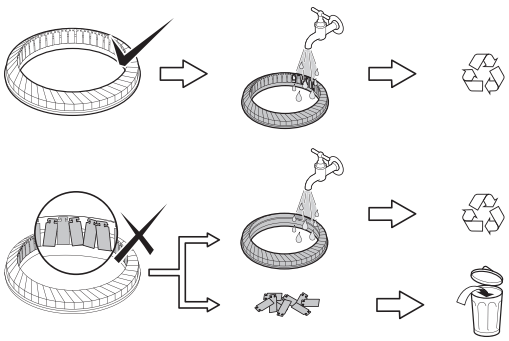

DN425-600

D	Die Dichtung und die Fikser überprüfen, ob diese in unbeschädigten, neuwertigem Zustand sind.
NL	Controleer de conditie van de “Fiksers” en de afdichtingsring.
F	Vérifiez l’état des “Fiksers” et du joint.
NO	Kontroller “Fikserne” og pakningens stand.
SE	Kontrollera “Fiksers” och tätningars kondition.
DK	Kontroller “Fiksernes” og tætningsringens tilstand.
FIN	Tarkista “Fikseri” ja tiiviste kunto.
PT	Ver o estado dos Fiksers” e do anel.
ES	Revisar los “Fiksers” y la junta.
IT	Controllare gli inserti antisfilo “Fiksers” e la guarnizione.
GR	Ελέγξτε την κατάσταση στην οποία βρίσκονται τα εξαρτήματα αγκύρωσης που διαθέτει ο σύνδεσμος ‘‘Fiksers’’ και τα παρεμβύσματα.
CZ	Zkontrolovat stav fixerů a těsnění.
HU	Ellenőrizze a “Fikser”-ek és a tömítés állapotát.
RO	Se verifica starea elementele de fixare “Fiksers” si a garniturilor.
PL	Sprawdź stan blaszek i uszczelki.
RUS	Проверить состояние “Fiksers” (металлических фиксаторов) и резинового уплотнения.

DN425-DN600/12-20/ML

20 CHECK BOLTS, WASHERS AND NUTS.

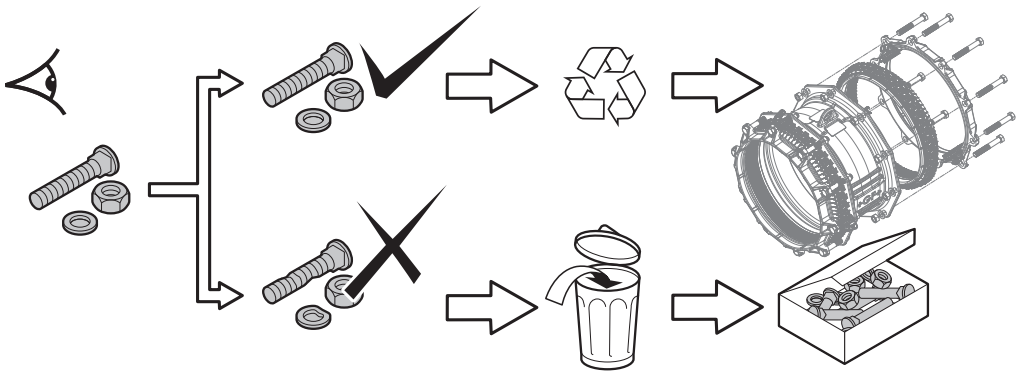

D	Die Schrauben, Unterlegscheiben und Muttern auf Gebrauchstauglichkeit überprüfen.
NL	Controleer bouten, moeren en onderlegringen.
F	Vérifiez l'état des vis, des rondelles et des écrous.
NO	Kontroller skiver, mutter og bolter.
SE	Kontrollera bultar, brickor och muttrar.
DK	Kontroller bolte, skiver og møtrikker.
FIN	Tarkista lukko, prikka ja mutteri.
PT	Ver o estado dos parafusos, arruelas e porcas.
ES	Revisar los tornillos, arandelas y tuercas.
IT	Controllare viti, dadi e rondelle.
GR	Ελέγξτε την κατάσταση των βιδών, των παξιμαδιών και των περικοχλίων αν έχουν εφαρμόσει σωστά.
CZ	Zkontrolovat šrouby, podložky a matky.
HU	Ellenőrizze a csavarokat, anyákat és alátéteket.
RO	Se verifica suruburile si piulitele.
PL	Sprawdź śruby, nakrętki i podkładki.
RUS	Проверить наличие болтов, шайб и гаек.

DN425-DN600/12-20/ML

21 22 23 24 25 INSTALLATION/REMOVAL OF "FIKSERS"

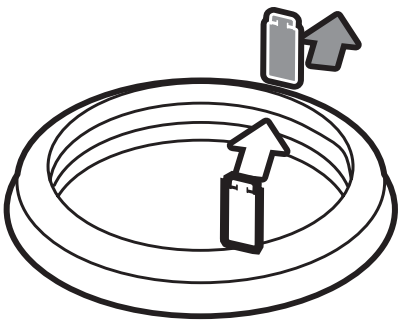

D	Montage/Demontage der Fikser
NL	Fiksers monteren/verwijderen
F	Mise en place / Dépose des "Fiksers"
NO	Montering/fjerning av "Fiksere"
SE	Installation/borttagande av "Fiksers"
DK	Installation/demontering af fiksers
FIN	"Fikserien" asennus / poisto
PT	Instalação/Retirar los Fikser
ES	Instalación/Retirar los Fikser
IT	Installazione/rimozione "Fiksers"
GR	Εγκατάσταση/απομάκρυνση των εξαρτημάτων αγκύρωσης ''Fiksers''
CZ	Instalace/odstranění fixerů
HU	"Fikser"-ek behelyezése/eltávolítása
RO	Intalarea/Indepartarea elementelor de fixare "Fiksers"
PL	Montaż/demontaż blaszek "Fiksers"
RUS	Установка/снятие фиксаторов

DN425-DN600/12-20/ML

21

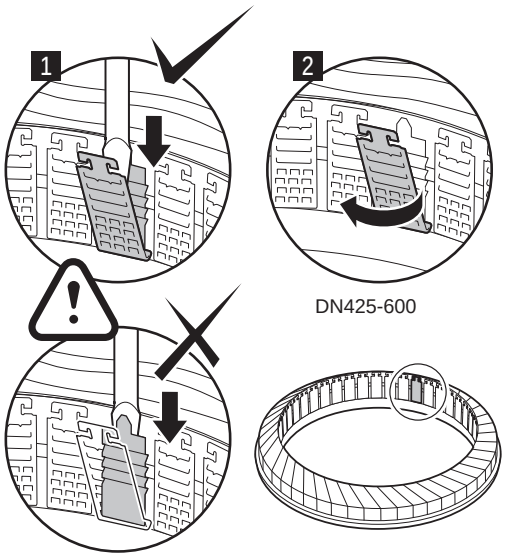

22

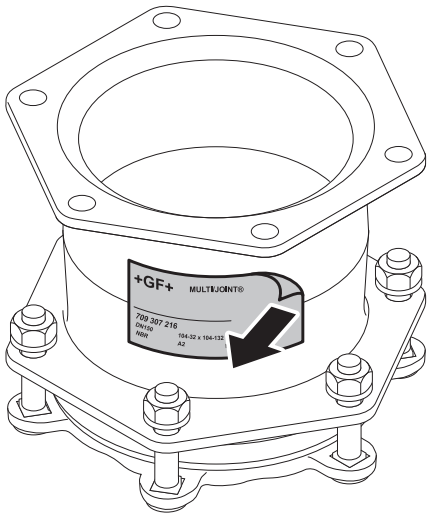

DN425-DN600/12-20/ML

23

CHECK TABLE FOR CORRECT NUMBER OF “FIKSERS” PER DN.

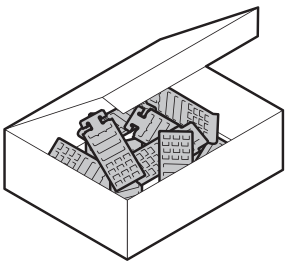

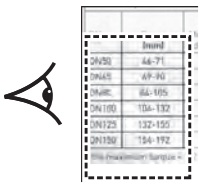

DN	Uni/Fikser
DN425	84
DN450	88
DN475	93
DN500	97
DN550	105
DN600	115

D	Die Anzahl (laut Tabelle) der Fikser überprüfen.
NL	Zie de tabel voor juiste aantal “Fiksers” per DN.
F	Vérifiez dans le tableau le nombre exact de “Fiksers” à installer par DN.
NO	Sjekk tabell vedrørende antall “Fiksere” mot DN.
SE	Kontrollera i tabellen för korrekt antal “Fiksers” per DN.
DK	Kontroller det korrekte antal “Fiksers” pr. DN med tabellen.
FIN	Tarkista taulukosta oikea “Fikserien” lukumäärä per DN.
PT	Ver na tabela o numero de “Fiksers” para cada diâmetro.
ES	Ver Tabla para instalar el numero apropiado de Fiksers por DN.
IT	Controllare in tabella il numero di “Fiksers” per DN.
GR	Ελέγξτε από τον πίνακα αν ο σύνδεσμος διαθέτει τον κατάλληλο αριθμό εξαρτημάτων αγκύρωσης “Fiksers” ανάλογα με τη διάμετρό του (DN).
CZ	V tabulce zkontrolovat správný počet fixerů v závislosti na DN.
HU	Ellenőrizze a táblázatot a megfelelő számú “Fikser” per DN érdekében.
RO	Se verifica in tabel numarul recomandat de elemente de fixare “Fiksers” pentru un anumit DN
PL	Odczytaj z tabeli liczbę blaszek przypadających na daną wartość DN.
RUS	Проверить по таблице количество фиксаторов для данного DN.

DN425-DN600/12-20/ML

24 CHECK IF “FIKSERS” (METAL GRIPPERS) POSITION IS CORRECT.

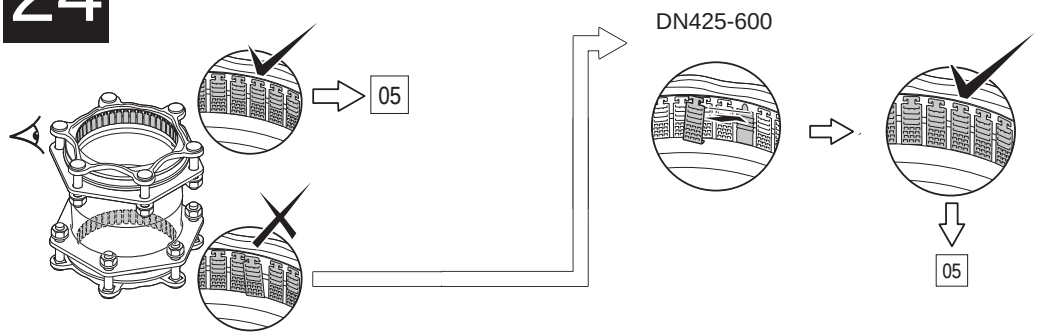

D	Sicherstellen, dass alle Fikser richtig positioniert sind.
NL	Controleer de juiste positie van de “Fiksers”.
F	Assurez-vous que les “Fiksers” (les mors métalliques) sont correctement positionnés.
NO	Kontroller at “Fikserne” er i riktig possisjon.
SE	Kontrollera om “Fiksers” position är korrekt.
DK	Kontroller om “Fikernes” placering er korrekt.
FIN	Tarkista “Fikseri”, että asento on oikein.
PT	Ver se a posição dos “Fiksers” é correcta.
ES	Revise si los “Fiksers” se encuentran en la posicion correcta.
IT	Controllare gli inserti antisfilo “Fiksers” sono OK.
GR	Ελέγξτε αν τα εξαρτήματα αγκύρωσης που διαθέτει ο σύνδεσμος “Fiksers” έχουν αγκυρώσει σωστά πάνω στον αγωγό.
CZ	Zkontrolovat správnou polohu fixerů.
HU	Ellenőrizze, hogy a “Fikser”-ek megfelelő helyzetben vannak-e.
RO	Se verifica daca pozitia elementelor de fixare “Fiksers” este corecta.
PL	Sprawdź poprawność ułożenia blaszek.
RUS	Убедиться в правильности установки “Fiksers” (металлических фиксаторов).

DN425-DN600/12-20/ML

25 ATTACH NEW STICKER.

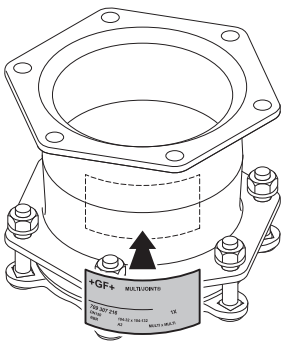

D	Neues Etikett am Fittingskörper anbringen.
NL	Plaats een nieuwe sticker.
F	Collez la nouvelle étiquette.
NO	Monter nytt klistremerke.
SE	Sätt på ny sticker.
DK	Påsæt ny etiket.
FIN	Attach new sticker.
PT	Colocar etiqueta nova.
ES	Adjuntar una nueva pegatina.
IT	Attaccare.
GR	Επικολλήστε καινούριο αυτοκόλλητο σήμανσης στον αγωγό μετά τη τοποθέτηση.
CZ	Nalepit nový štítek.
HU	Ragasszon fel új címkét.
RO	Se lipeste o eticheta noua.
PL	Przylep nową naklejkę.
RUS	Нанести новую наклейку.

DN425-DN600/12-20/ML

User manual MULTI/JOINT® 3000 Plus DN625 - DN825

Georg Fischer Waga N.V.

+GF+

GB	User Manual
D	Montageanleitung
NL	Montagehandleiding
F	Manuel d'instruction
NO	Brukermanual
SE	Användarmanual
DK	Montagevejledning
FIN	Käyttömanuaali
ES	Manual de instalacion
PT	Manual de instalação
IT	Manuale d'uso
RO	Manualul utilizatorului
CZ	Návod k montáži
GR	Εγχειρίδιο χρήσης
HU	Szerelési utasítás
RUS	Руководство по установке
PL	Instrukcja Obsługi

MULTI/JOINT® 3000 Plus

DN625-DN825

Georg Fischer Waga N.V.-P.O.Box 290-
8160 AG Epe-The Netherlands-www.waga.nl

DN625-DN825/08-20/ML

1

FITTING CHOICE

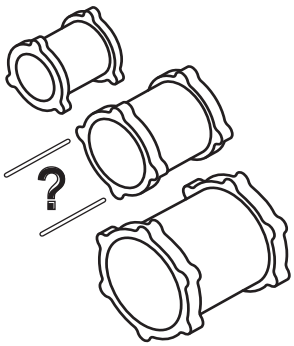

D	Kupplung auswählen	ES	Elegir union
NL	Keuze koppeling	IT	Scelta del giunto
F	Choisir le raccord	GR	Επιλογή συνδέσμου
NO	Valg av kobling	CZ	Výběr spojky
SE	Kopplings val	HU	Idom kiválasztása
DK	Valg af kobling	RO	Alegerea cuplei
FIN	Muhvi vaihtoehdot	PL	Wybór łącznika
PT	Escolha do tipo de ligação	RUS	Выбор фитинга

DN625-DN825/08-20/ML

1 CHECK TABLE IF CHOSEN FITTING MATCHES PIPE OD.

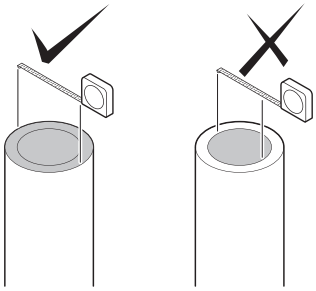

DN	Range (mm)
DN625	630 – 662
DN675	665 – 697
DN700	709 – 741
DN800	799 – 831
DN825	837 – 869

D	Die Rohraussendurchmesser überprüfen und mit der Tabelle vergleichen.
NL	Kies de juiste koppeling m.b.v. de tabel.
F	Vérifiez sur le tableau si le raccord couvre bien le diamètre extérieur du tube.
NO	Sjekk med tabell at koblingen stemmer overens med utvendig diameter rør.
SE	Kontrollera om vald rördel stämmer mot rörets ytterdiameter.
DK	Kontroller med tabellen om den valgte kobling passer til rørdiameteren.
FIN	Tarkista taulukosta jos valitut asennukset sopivat putkelle QD.
PT	Ver na tabela se os acessórios estão de acordo com o diâmetro exterior dos tubos.
ES	Ver tabla anexa para unir distintos diametros exteriores.
IT	Controllare sulla tabella se il giunto è idoneo al d.e. del tubo.
GR	Με βάση το πίνακα μεγεθών, επιβεβαιώστε ότι ο σύνδεσμος είναι κατάλληλος για τη συγκεκριμένη διάμετρο αγωγού στον οποίο πρόκειται να τοποθετηθεί.
CZ	V tabulce zkontrolovat použitelnost tvarovky v daném rozsahu průměrů.
HU	Ellenőrizze, hogy a kiválasztott idom megfelel-e a cső külső átmérőjéhez.
RO	Se verifica in tabel daca fitingul ales corespunde Dext al tevii.
PL	Sprawdź w tabeli czy łącznik pasuje do zewnętrznej średnicy rury.
RUS	Проверить по таблице совместимость фитинга с трубой.

DN625-DN825/08-20/ML

2 3 PREPARE FITTING FOR INSTALLATION

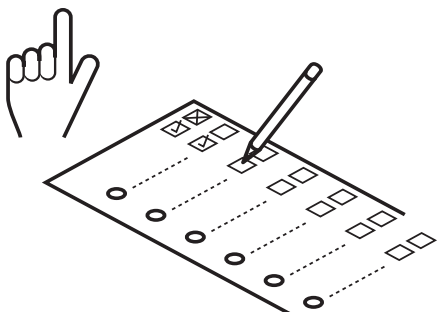

D	Kupplung für die Montage vorbereiten
NL	Montageklaar maken
F	Préparez le raccord pour l'installation
NO	Forbredelse av kobling
SE	Förbered kopplingen för installation
DK	Klargør koblingen til installationen
FIN	Valmista muhvi asennusta varten
PT	Preparação da ligação
ES	Preparar union para instalacion
IT	Preparazione per l'installazione
GR	Προετοιμασία συνδέσμου για τοποθέτηση
CZ	Příprava spojky pro instalaci
HU	Idom előkészítése a felhelyezésre
RO	Pregatirea cuplei pentru instalare
PL	Przygotowanie łącznika do instalacji
RUS	Подготовка фитинга к установке

DN625-DN825/08-20/ML

2

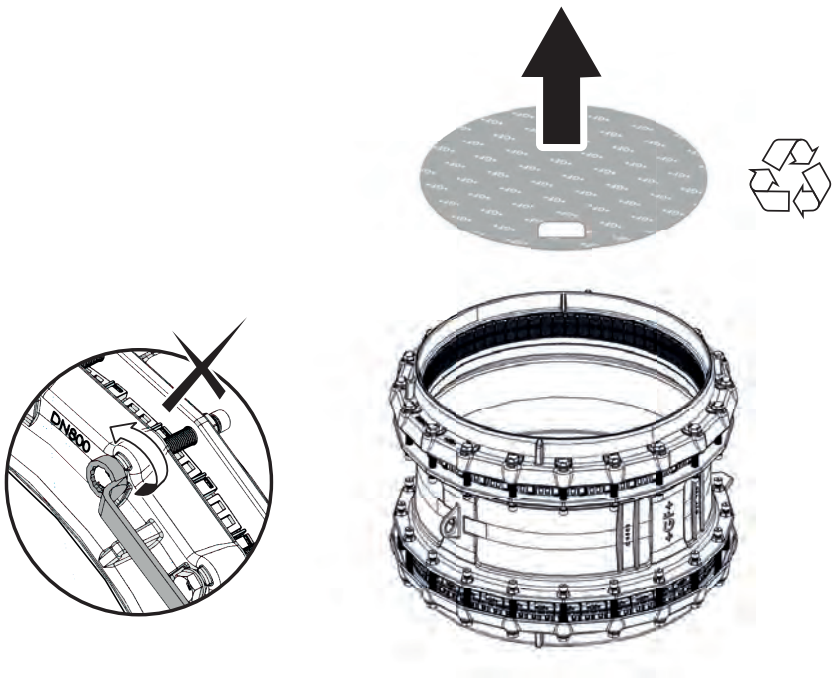

DN625-DN825/08-20/ML

3

CHECK IF “FIKSERS” (METAL GRIPPERS) POSITION IS CORRECT.

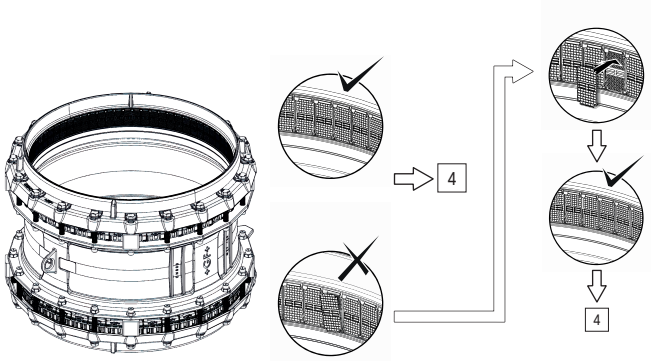

D	Sicherstellen, dass alle Fikser richtig positioniert sind.
NL	Controleer de juiste positie van de “Fiksers”.
F	Assurez-vous que les “Fiksers” (les mors métalliques) sont correctement positionnés.
NO	Kontroller at “Fikserne” er i riktig possisjon.
SE	Kontrollera om “Fiksers” position är korrekt.
DK	Kontroller om “Fikernes” placering er korrekt.
FIN	Tarkista “Fikseri”, että asento on oikein.
PT	Ver se a posição dos “Fiksers” é correto.
ES	Revise si los “Fiksers” se encuentran en la posicion correcta.
IT	Controllare gli inserti antisfilo “Fiksers” sono OK.
GR	Ελέγξτε αν τα εξαρτήματα αγκύρωσης που διαθέτει ο σύνδεσμος “Fiksers” έχουν αγκυρώσει σωστά πάνω στον αγωγό.
CZ	Zkontrolovat správnou polohu fixerů.
HU	Ellenőrizze, hogy a “Fikser”-ek megfelelő helyzetben vannak-e.
RO	Se verifica daca pozitia elementelor de fixare “Fiksers” este corecta.
PL	Sprawdź poprawność ułożenia blaszek.
RUS	Убедиться в правильности установки “Fiksers” (металлических фиксаторов).

DN625-DN825/08-20/ML

4
5
6

PIPE PREPARATION

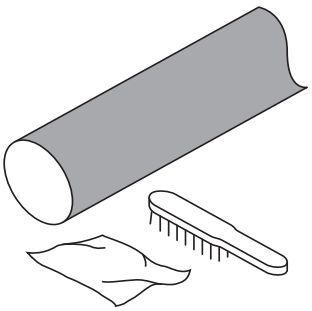

D	Zu verbindende Rohre vorbereiten	ES	Preparacion de la tuberia
NL	Voorbereiden buis	IT	Preparazione tubazione
F	Préparez les tubes	GR	Προετοιμασία Αγωγού
NO	Forbredelse av rør	CZ	Příprava trubky
SE	Rörberedning	HU	Cső előkészítése
DK	Klargøring af røret	RO	Pregatirea conductei
FIN	Putken esivalmistus	PL	Przygotowanie rury
PT	Preparação do tubo	RUS	Подготовка труб

DN625-DN825/08-20/ML

4 REMOVE ALL RUST, DIRT, BURRS, DAMAGES AND ALL FINISHING LAYERS FROM THE PIPE. INSTALL ON MEDIUM CARRYING PIPE MATERIAL ONLY.

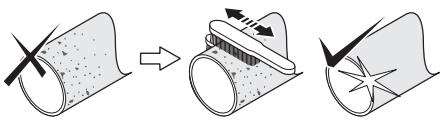

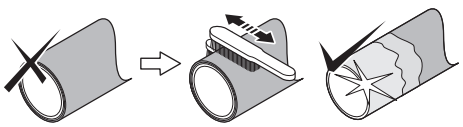

D	Von der drucktragenden Rohroberfläche allen Rost, Grat, Schmutz, Schäden und alle Beschichtungen entfernen.
NL	Verwijder alle roest, vuil, bramen, beschadigingen en buislagen. Monteer alleen op de mediumvoerende buis.
F	Eliminez la rouille, la saleté, les bourrelets de soudures, les défauts de surface et toutes les couches de finition du tube. Assemblez seulement sur le matériau principal du tube.
NO	Fjern all rust, løs overflate samt skader på materialet og overflatebehandling.
SE	Avlägsna all rost, smuts, grader och eventuell ytbehandling från röret. Montera endast på mediabärande rörmaterial.
DK	Fjern al rust, snavs, spåner, beskadigelser og alle belægninger på røret. Monter kun på selve det mediebærende rør.
FIN	Poista kaikki ruoste, lika, taite, vauriot ja kasaumat putkesta. Asenna ainoastaan keskivahvalle putkelle.
PT	Remover oxidação, sugeira, rebarbas, e revestimento do tubo.
HU	Távolítson el minden rozsdát, szennyeződést, sorját, sérüléseket és minden fedőréteget a csőről. Csak közvetlenül a közeg szállító csőanyagra helyezze fel az idomot.
ES	Retirar toda la suciedad, polvo, daños y etiquetas de la tuberia. Montar solamente entre tubos.
IT	Rimuovere sporcizia, polvere, intagli e gli strati superficiali della tubazione. Il montaggio deve avvenire sullo strato a contatto del fluido trasportato.
GR	Καθαρίστε όλα τα οξειδωμένα τμήματα, τις επικαθίσεις, τις παραμορφώσεις και τις υλικές βλάβες της επιφάνειας του αγωγού καθώς και τις επιστρώσεις του αγωγού μέχρι τον αγωγό μεταφοράς του υλικού.
CZ	Odstranit všechny nečistoty, rez, otřepy a všechny dodatečné vrstvy z povrchu trubky. Montovat pouze na trubky určené pro transport médií.
RO	Indepartati praful, crestaturile, murdaria, defectele precum si toate straturile de acoperire de pe teava. Se monteaza doar pe materialul conductei.
PL	Usuń wszelkiego rodzaju uszkodzenia, zabrudzenia, zadrapania, rdzę i wierzchnie warstwy na długości rury pokrytej przez łącznik.
RUS	Удалить любые загрязнения, ржавчину, задиры и наплывы, а так же покрытия с поверхности трубы. Устанавливать только на основной материал трубы.

DN625-DN825/08-20/ML

5 CHECK TABLE FOR MINIMUM INSERTION DEPTH (210 mm).

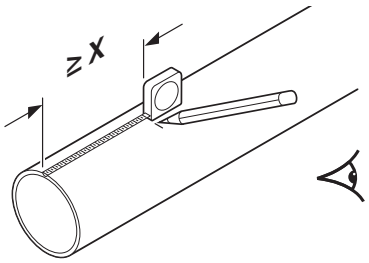

DN	Min. insertion depth (mm)*
DN625	210
DN675	
DN700	
DN800	
DN825	

** For maximum joint gap information; see our technical manual*

D	Aus der Tabelle die Einstecktiefe entnehmen (X).
NL	Zie de tabel voor de minimale insteekdiepte (X).
F	Vérifiez sur le tableau la profondeur d'insertion (X) correcte du tube.
NO	Sjekk med tabell for korrekt innstikksdybde (X).
SE	Kontrollera i tabellen korrekt insticksdjup (X).
DK	Kontroller med tabellen for korrekt indstiksdybde (X).
FIN	Tarkista taulukosta oikea asennus syvyys (X).
PT	Ver na tabela a profundidade (X) de inserção do tubo no acessório.
ES	Ver tabla para la profundidad de inserción minima (X).
IT	Controllare sulla tabella la profondità di inserimento (X).
GR	Συμβουλευτείτε τον πίνακα για την υπόδειξη του κατάλληλου βάθους εισαγωγής (X) του συνδέσμου στον αγωγό.
CZ	Zkontrolovat v tabulce správnou hloubku zasunutí (X).
HU	Ellenőrizze a táblázatot a megfelelő betolási mélység érdekében (X).
RO	Se verifica in tabel adancimea corecta de inserare (X).
PL	Korzystając z tabeli określ głębokość nasunięcia łącznika (X).
RUS	Проверить по таблице значение глубины ввода трубы (X).

DN625-DN825/08-20/ML

6

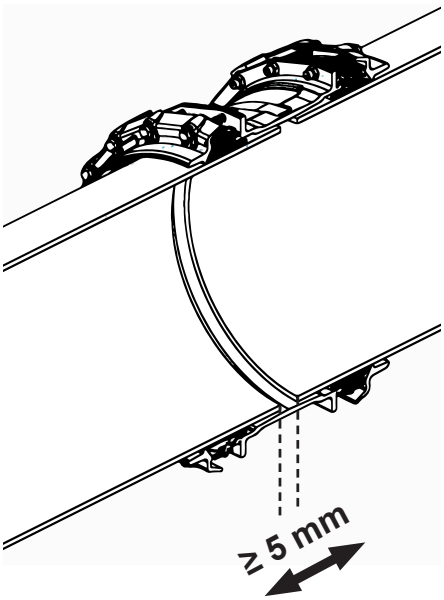

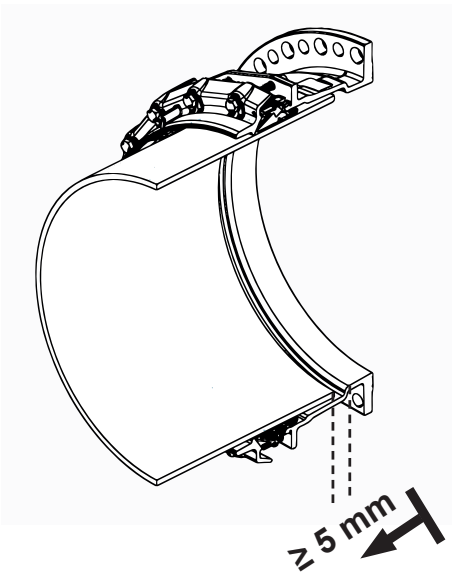

DN625-DN825/08-20/ML

7 9 11
8 10
9 10

INSTALLATION

EN:
When manoeuvring the product out of the packaging to the pipe surface, please ensure that the proper lifting procedures are followed. Ensure that local safety and lifting procedures are adopted. All lifting should be done by qualified personnel, with approved equipment.

NL:
Zorg ervoor dat bij het manoeuvreren van het product vanuit de verpakking naar het buisoppervlak, de juiste hijsprocedures in acht worden genomen. U dient de lokale veiligheids- en hijsvoorschriften op te volgen. Het hijsen van producten dient te gebeuren met gekeurde hijsmiddelen en door gekwalificeerd personeel.

D:
Bitte stellen Sie eine ordnungsgemäße manuelle Handhabung sicher, wenn das Produkt aus seiner Verpackung entnommen, transportiert und am Rohr angebracht wird. Ist der Einsatz mechanischer Hebezeuge erforderlich, so muss gewährleistet werden, dass sichere Arbeitsverfahren angewendet werden, geprüfte und anerkannte Hebezeuge verwendet werden und von qualifiziertem Personal durchgeführt werden.

DU	Montage	ES	Instalación
NL	Montage	IT	Installazione
F	Installation	GR	Installazione
NO	Montering	CZ	Instalace
SE	Installation	HU	Felhelyezés
DK	Installation	RO	Instalarea
FIN	Asennus	PL	Montaż
PT	Instalação	RUS	Установка

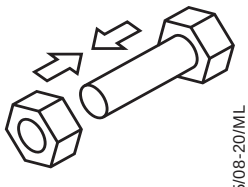

DN625-DN825/08-20/ML

7 PLASTIC PIPES

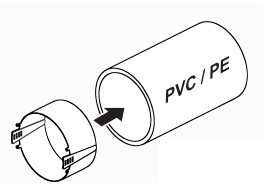

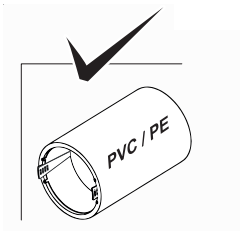

(Use insert stifferener wedge MJ DN625 - DN800 approved by Georg Fischer Waga N.V.)

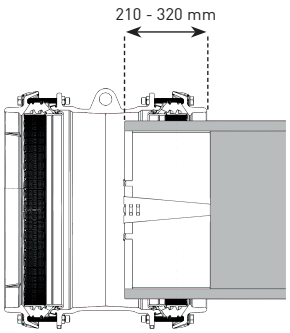

8 NOMINAL ANGULARITY*

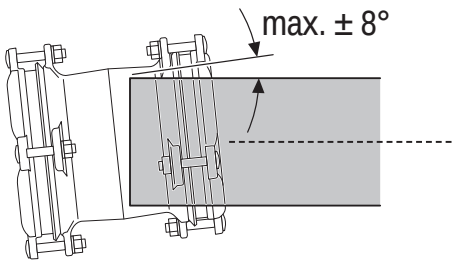

* Based on the middle of the range

DN625-DN825/08-20/ML

9a SLIDE THE MULTI/JOINT® 3000 PLUS ONTO PIPE END AND REMOVE TRANSPORT CLIP!

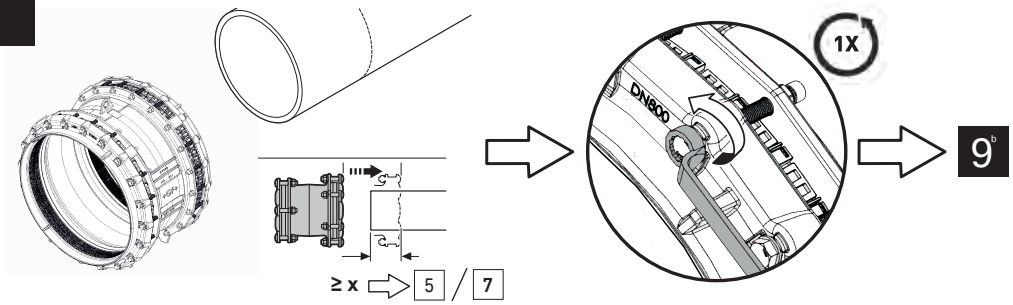

D	Den MULTI/JOINT® 3000 Plus auf das Rohrende schieben und den Transportclip entfernen!
NL	Schuif de MULTI/JOINT® 3000 Plus op het buiseinde en verwijder de transportclips!
F	Faites glisser le MULTI/JOINT® 3000 Plus sur l'extrémité du tuyau et retirez le clip de transport!
NO	Skli MULTI/JOINT® 3000 Plus muffe innpå rørende og deretter fjern trasportpinnen.
SE	Skjut MULTI/JOINT® 3000 Plus kopplingen på röret och ta bort transportsäkringarna (clip)!
DK	Skub MULTI/JOINT® 3000 Plus på røret og fjern transport-beslaget!
FIN	Liu'uta MULTI/JOINT® 3000 Plus putken päälle ja poista kuljetus klipsi!
PT	Deslize o MULTI/JOINT® 3000 Plus na extremidade do tubo e remover o clipe de transporte!
ES	Deslice el MULTI/JOINT® 3000 Plus sobre el extremo del tubo y retire el clip de transporte!
IT	Inserire MULTI/JOINT® 3000 Plus sul tubo e successi-vamente rimuovere i fermi per il trasporto!
GR	Εισαγετε το multi/joint® 3000 plus στο ακρο του αγωγου και αφαιρεστε το κουμπωμα μεταφορασ!
CZ	Nasunout tvarovku MULTI/JOINT® 3000 Plus na konec trubky a teprve potom odstranit oranžové vymezovací díly!
HU	Csúsztassa a MULTI/JOINT® 3000 Plus kötőidomot a csővégre, és távolítsa el a szállítási rögzítőelemet!
RO	Introduceti piesa MULTI/JOINT® 3000 Plus pe capatul conductei si inlaturati siguranta pentru transport!
PL	Nasuń łącznik MULTI/JOINT® 3000 Plus na rurę a następnie zdejmij zabezpieczenie transportowe!
RUS	Установите MULTI/JOINT® 3000 Plus на конец трубы и удалите транспортировочный хомут!

DN625-DN825/08-20/ML

9b

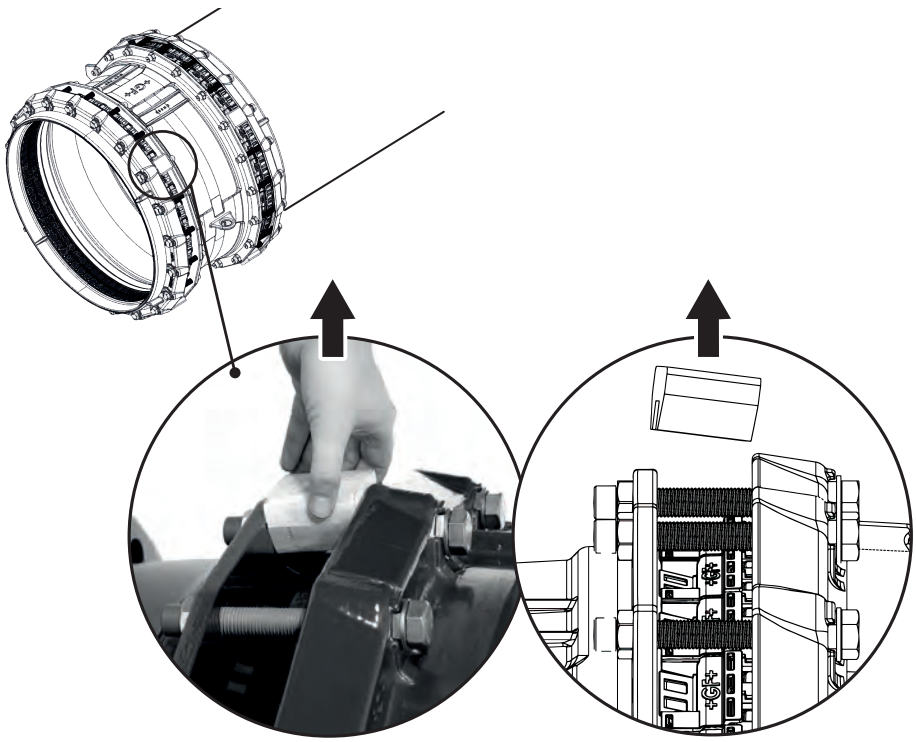

DN625-DN825/08-20/ML

10a TIGHTEN THE BOLTS WITH THE CORRECT TORQUE.

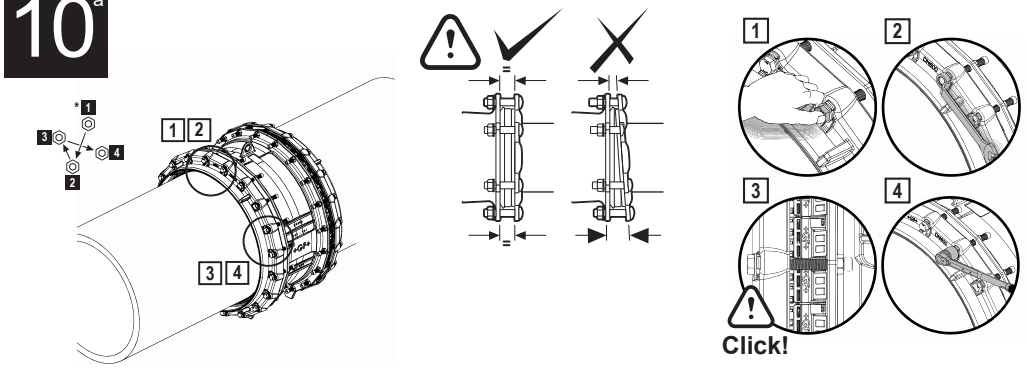

D	Der Tabelle das richtige Schraubendrehmoment entnehmen.
NL	Zie de tabel voor het juiste aandraaimoment.
F	Vérifiez dans les tableaux le couple de serrage à respecter.
NO	Mutrene strammes i kryss, da man skal holde samme avstand mellom koblingshus og trykkflens(gland). Etter-stram med en momentnøkkel ihht. Momenttabell.
SE	Kontrollera i tabell korrekt åtdragningsmoment.
DK	Det rigtige tilspændingsmoment findes i tabellen.
FIN	Tarkista taulukosta oikea vääntömomentti.
PT	Ver na tabela a força de aperto.
ES	Ver tabla para el par de apriete.
IT	Controllare la tabella per il serraggio.
GR	Συμβουλευτείτε τον πίνακα για την επιλογή της κατάλληλης στρεπτικής ροπής που θα πρέπει να εφαρμοστεί στον σύνδεσμο, κατά την διαδικασία της σύσφιξης του στον αγωγό.
CZ	Zkontrolovat v tabulce správný utahovací moment.
HU	Ellenőrizze a táblázatot a megfelelő nyomaték érdekében.
RO	Se verifica in tabel valoarea momentului de stangere.
PL	Odczytaj z tabeli odpowiedni moment dokręcania śrub.
RUS	Проверить по таблице соответствующий момент затяжки болтов.

DN625-DN825/01-21/ML

10b CHECK TABLE FOR INSTALLATION TORQUE AND PRESSURE RATING**.

RESTRAINT

MULTI/JOINT® 3000 Plus **with Fikser**

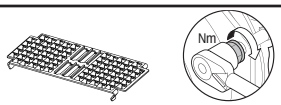

(S)St, CU, DCI, GCI, AC*, GRP*, PVC, PE, PEX, PP-B, PP-H, ABS
(* NO guarantee as quality varies!)

DN	Torque (Nm)		PFA water (bar)
	Metal	Non metal	
DN625	200	140	10
DN675			
DN700			
DN800			
DN825			

NON-RESTRAINT

MULTI/JOINT® 3000 Plus **without Fikser**

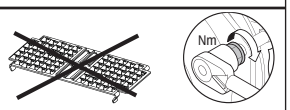

(S)St, CU, DCI, GCI, AC, GRP, PVC, PE, PEX, PP-B, PP-H, ABS

DN	Torque (Nm)	PFA water (bar)
DN625	140	16
DN675		
DN700		
DN800		
DN825		

** All fittings PN16 rated, see restraint table for pull out restraint forces

DN625-DN825/08-20/ML

11 ≤ 0 ºC ONLY ON PE PIPE, APPLY TORQUE (PRESCRIBED UNDER 10) ONE MORE TIME AFTER 30 MINUTES.

PE

≤ 0 ºC ⇨ 30 min. ⇨ 10 ▸ 140 Nм

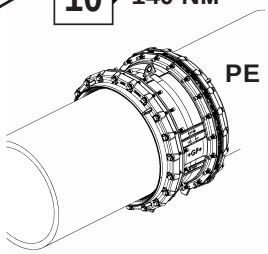

D	Nur für Einsatz auf PE Rohren bei Temperaturen ≤ 0 ºC, das unter 11 ermittelte Schraubendrehmoment nach 30 Minuten noch einmal aufbringen.
NL	Alleen bij montage op PE bij temperaturen onder 0 ºC, het (onder 11) voorgeschreven draaimoment na 30 minuten nog eenmaal aanbrengen.
F	Répetez l'étape 11 après 30 minutes seulement sur des tubes en PE en temps glacial.

≥ 0 ºC ⇨ 12

DN625-DN825/08-20/ML

12 13 TESTING

$$P_{max} \leq 1{,}5 \times PFA$$

D	Dichtheitsprüfung	ES	Probar
NL	Testen	IT	Test
F	Essais	GR	Έλεγχος/ δοκιμές
NO	Trykktesting	CZ	Zkouška
SE	Testa	HU	Tesztelés
DK	Prøvning	RO	Testarea
FIN	Testi	PL	Testowanie
PT	Teste	RUS	Испытание

DN625-DN825/08-20/ML

12 CONDUCT A PRESSURE TEST.

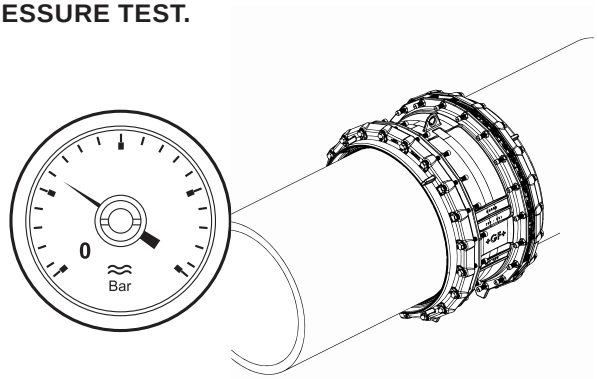

D	Dichtheitsprüfung durchführen.
NL	Voer een druktest uit.
F	Procédez à un essai de pression.
NO	Utfør trykktest på hele installasjonen, med minimum det aktuelle driftstrykk før anlegget dekkes til.Trykktestingen må ikke overstige 1,5 x PFA (max arbeidstrykk) i henhold til tabellen.
SE	Utför tryckprovning.
DK	Gennemfør en trykprøvning.
FIN	Aseta painetesti.
PT	Efetuar teste de pressão.
ES	Realizar un test de presión.
IT	Fare test in pressione.
GR	Για τον έλεγχο της στεγανότητας της σύνδεσης πραγματοποιείστε δοκιμή υπό πίεση στον αγωγό για τυχόν διαρροές.
CZ	Provést tlakovou zkoušku.
HU	Hajtson végre nyomáspróbát.
RO	Se realizeaza un test de presiune.
PL	Przeprowadź próbę ciśnieniową.
RUS	Провести опрессовку.

DN625-DN825/08-20/ML

13 IF PRESSURE TEST FAILS: REINSTALL FITTING. TEST OK ⇨ INSTALLATION FINISHED.

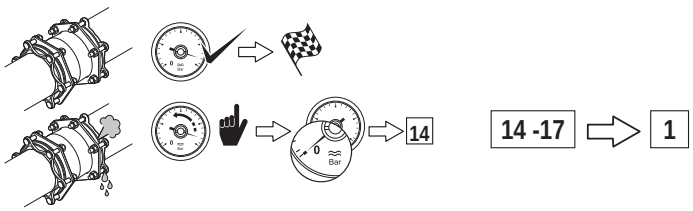

D	Falls die Dichtheitsprüfung eine Undichtheit aufzeigt, den Montagevorgang wiederholen - nach wiederholter, erfolgreicher Dichtheitsprüfung ist die Montage abgeschlossen.
NL	Druktest negatief → opnieuw installeren. Test OK → installatie gereed.
F	Mauvais résultat d'essai, réinstallez le raccord. Essai réussi, l'installation est terminée.
NO	Trykkprøving negativ → Re-installer kobling. Test OK → installasjon er utført.
SE	Tryckprovning falerar → Ommontera rördelen. Test OK → installation avslutad.
DK	Trykprøvning negativ → Re-installer kobling. Test OK → installationen er udført.
FIN	Paine testi hylätty → asenna uudelleen. Testi OK → asennus suoritettu.
PT	Teste de pressão falhou → Voltar a instalar o acessório → Teste OK → Instalação terminada.
ES	Test de Presion Fallo → Reinstalar el accesorio TEST OK → Instalacion completada
IT	Se test negativo → Reinstallare. Se test positivo → Installazione finita.
GR	Σε περίπτωση που η εγκατάσταση αποτύχει και υπάρχει διαρροή στη σύνδεση → Επανα-εγκαταστήσετε το σύνδεσμο. Σε περίπτωση που η δεν παρατηρηθεί διαρροή στη σύνδεση → η εγκατάσταση του συνδέσμου επί του αγωγού έχει ολοκληρωθεί με επιτυχία.
CZ	Tlaková zkouška není OK → tvarovku znovu namontovat. Tlaková zkouška OK → konec instalace.
HU	Nyomás próba sikertelen → végezze el újra az idom felhelyezését. Próba sikeres → felhelyezés befejezve.
RO	Daca testul de presiune esueaza → Se reinstaleaza fitingul. Daca rezultatul testului este OK → Instalare terminata.
PL	Nieudana próba → Ponowny montaż łącznika. Udana próba → montaż zakończony.
RUS	Опрессовка не пройдена → Установить фитинг снова. Опрессовка пройдена → Установка завершена.

DN625-DN825/08-20/ML

14 DISASSEMBLY

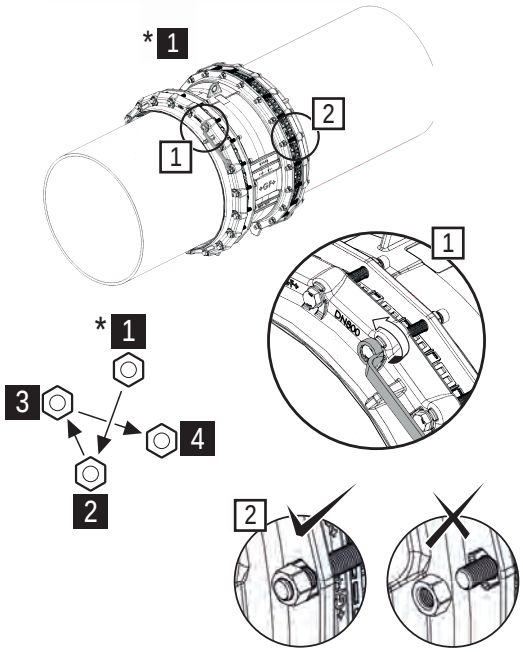

15 DISASSEMBLY

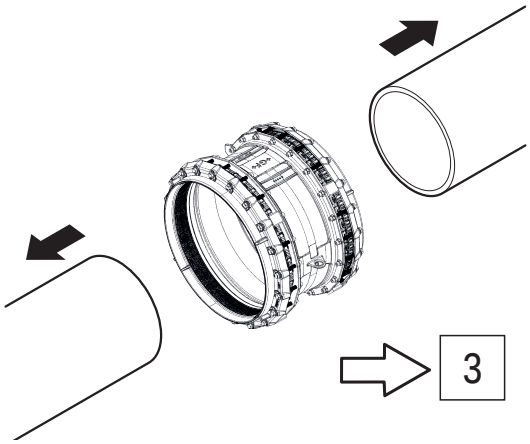

DN625-DN825/08-20/ML

16 17 REUSE

ALWAYS CHECK WITH YOUR LOCAL SUPPLIER FOR DETAILED INFORMATION ON REUSE

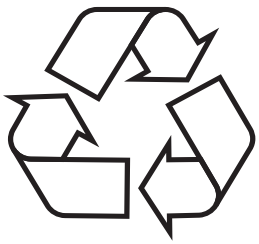

* For MULTI/JOINT® 3000 Plus User Manual re-use, replacing the Uni/Fiksring of DN625 – DN825 see our website www.gfps.com

D	Wiederverwendung	ES	Reutilizar
NL	Hergebruik	IT	Riutilizzo
F	Réutilisation	GR	Επαναχρησιμοποίηση
NO	Gjenbruk	CZ	Opětovné použití
SE	Återanvända	HU	Újra felhasználás
DK	Genbrug	RO	Reutilizarea
FIN	Uudelleen käyttö	PL	Ponowne użycie
PT	Reutilização	RUS	Повторное использование

DN625-DN825/08-20/ML

16 CHECK “FIKSERS” AND GASKET CONDITION.

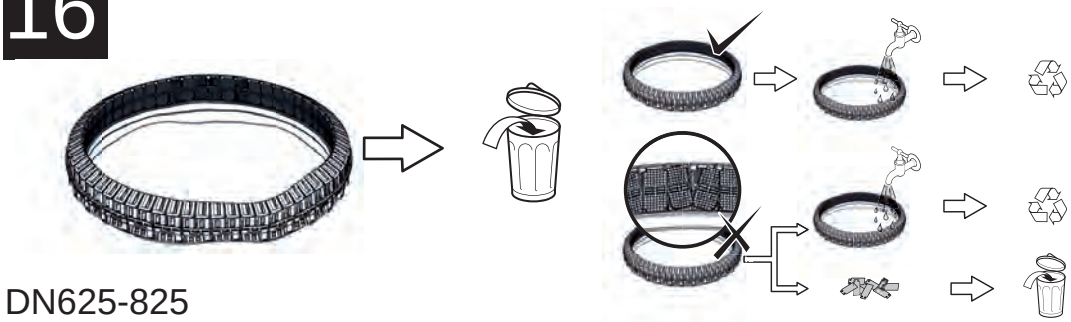

DN625-825

D	Die Dichtung und die Fikser überprüfen, ob diese in unbeschädigten, neuwertigem Zustand sind.
NL	Controleer de conditie van de “Fiksers” en de afdichtingsring.
F	Vérifiez l’état des “Fiksers” et du joint.
NO	Kontroller “Fikserne” og pakningens stand.
SE	Kontrollera “Fiksers” och tätningars kondition.
DK	Kontroller “Fiksernes” og tætningsringens tilstand.
FIN	Tarkista “Fikseri” ja tiiviste kunto.
PT	Ver o estado dos Fiksers” e do anel.
ES	Revisar los “Fiksers” y la junta.
IT	Controllare gli inserti antisfilo “Fiksers” e la guarnizione.
GR	Ελέγξτε την κατάσταση στην οποία βρίσκονται τα εξαρτήματα αγκύρωσης που διαθέτει ο σύνδεσμος “Fiksers” και τα παρεμβύσματα.
CZ	Zkontrolovat stav fixerů a těsnění.
HU	Ellenőrizze a “Fikser”-ek és a tömítés állapotát.
RO	Se verifica starea elementele de fixare “Fiksers” si a garniturilor.
PL	Sprawdź stan blaszek i uszczelki.
RUS	Проверить состояние “Fiksers” (металлических фиксаторов) и резинового уплотнения.

DN625-DN825/08-20/ML

17 CHECK BOLTS, WASHERS AND NUTS.

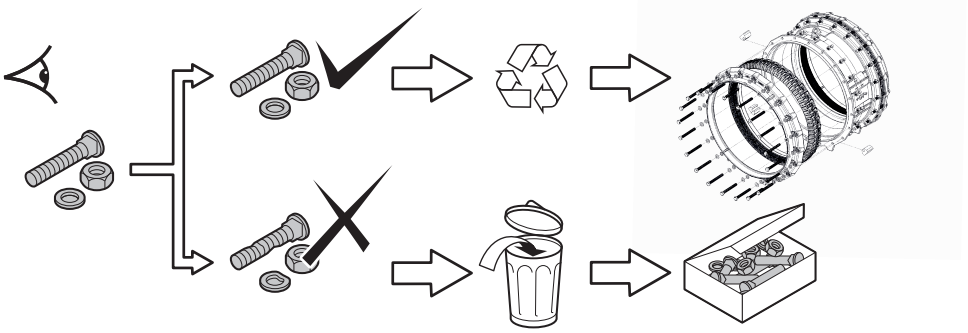

D	Die Schrauben, Unterlegscheiben und Muttern auf Gebrauchstauglichkeit überprüfen.
NL	Controleer bouten, moeren en onderlegringen.
F	Vérifiez l’état des vis, des rondelles et des écrous.
NO	Kontroller skiver, mutter og bolter.
SE	Kontrollera bultar, brickor och muttrar.
DK	Kontroller bolte, skiver og møtrikker.
FIN	Tarkista lukko, prikka ja mutteri.
PT	Ver o estado dos parafusos, arruelas e porcas.
ES	Revisar los tornillos, arandelas y tuercas.
IT	Controllare viti, dadi e rondelle.
GR	Ελέγξτε την κατάσταση των βιδών, των παξιμαδιών και των περικοχλίων αν έχουν εφαρμόσει σωστά.
CZ	Zkontrolovat šrouby, podložky a matky.
HU	Ellenőrizze a csavarokat, anyákat és alátéteket.
RO	Se verifica suruburile si piulitele.
PL	Sprawdź śruby, nakrętki i podkładki.
RUS	Проверить наличие болтов, шайб и гаек.

DN625-DN825/08-20/ML

18
19
20

INSTALLATION/REMOVAL OF “FIKSERS”

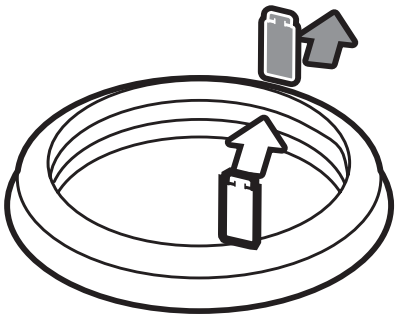

D	Montage/Demontage der Fikser
NL	Fiksers monteren/verwijderen
F	Mise en place / Dépose des “Fiksers”
NO	Montering/fjerning av “Fiksere”
SE	Installation/borttagande av “Fiksers”
DK	Installation/demontering af fiksers
FIN	“Fikserien” asennus / poisto
PT	Instalação/Retirar los Fikser
ES	Instalación/Retirar los Fikser
IT	Installazione/rimozione “Fiksers”
GR	Εγκατάσταση/απομάκρυνση των εξαρτημάτων αγκύρωσης ‘’Fiksers’’
CZ	Instalace/odstranění fixerů
HU	“Fikser”-ek behelyezése/eltávolítása
RO	Intalarea/Indepartarea elementelor de fixare “Fiksers”
PL	Montaż/demontaż blaszek “Fiksers”
RUS	Установка/снятие фиксаторов

DN625-DN825/08-20/ML

18

INSTALLATION/REMOVAL OF “FIKSERS”.

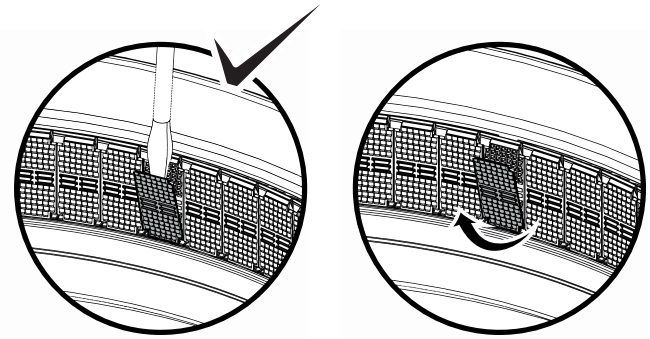

D	Montage/Demontage der Fikser
NL	Fiksers monteren/verwijderen
F	Mise en place / Dépose des “Fiksers”
NO	Montering/fjerning av “Fiksere”
SE	Installation/borttagande av “Fiksers”
DK	Installation/demontering af fiksers
FIN	“Fikserien” asennus / poisto
PT	Instalação/Retirar los Fikser
ES	Instalación/Retirar los Fikser
IT	Installazione/rimozione “Fiksers”
GR	Εγκατάσταση/απομάκρυνση των εξαρτημάτων αγκύρωσης ‘’Fiksers’’
CZ	Instalace/odstranění fixerů
HU	“Fikser”-ek behelyezése/eltávolítása
RO	Intalarea/Indepartarea elementelor de fixare “Fiksers”
PL	Montaż/demontaż blaszek “Fiksers”
RUS	Установка/снятие фиксаторов

DN625-DN825/08-20/ML

19 CHECK TABLE FOR CORRECT NUMBER OF “FIKSERS” PER DN.

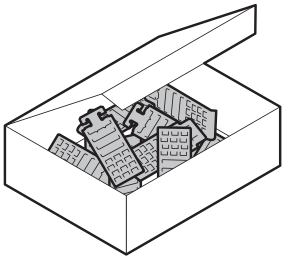

DN	Uni/Fikser
DN625	58
DN675	61
DN700	65
DN800	73
DN825	77

D	Die Anzahl (laut Tabelle) der Fikser überprüfen.
NL	Zie de tabel voor juiste aantal “Fiksers” per DN.
F	Vérifiez dans le tableau le nombre exact de “Fiksers” à installer par DN.
NO	Sjekk tabell vedrørende antall “Fiksere” mot DN.
SE	Kontrollera i tabellen för korrekt antal “Fiksers” per DN.
DK	Kontroller det korrekte antal “Fiksers” pr. DN med tabellen.
FIN	Tarkista taulukosta oikea “Fikserien” lukumäärä per DN.
PT	Ver na tabela o numero de “Fiksers” para cada diâmetro.
ES	Ver Tabla para instalar el numero apropiado de Fiksers por DN.
IT	Controllare in tabella il numero di “Fiksers” per DN.
GR	Ελέγξτε από τον πίνακα αν ο σύνδεσμος διαθέτει τον κατάλληλο αριθμό εξαρτημάτων αγκύρωσης “Fiksers” ανάλογα με τη διάμετρό του (DN).
CZ	V tabulce zkontrolovat správný počet fixerů v závislosti na DN.
HU	Ellenőrizze a táblázatot a megfelelő számú “Fikser” per DN érdekében.
RO	Se verifica in tabel numarul recomandat de elemente de fixare “Fiksers” pentru un anumit DN
PL	Odczytaj z tabeli liczbę blaszek przypadających na daną wartość DN.
RUS	Проверить по таблице количество фиксаторов для данного DN.

DN625-DN825/08-20/ML

20 CHECK IF “FIKSERS” (METAL GRIPPERS) POSITION IS CORRECT.

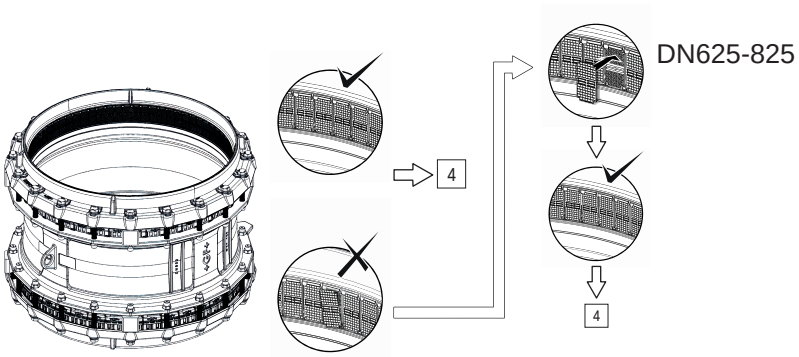

D	Sicherstellen, dass alle Fikser richtig positioniert sind.
NL	Controleer de juiste positie van de “Fiksers”.
F	Assurez-vous que les “Fiksers” (les mors métalliques) sont correctement positionnés.
NO	Kontroller at “Fikserne” er i riktig possisjon.
SE	Kontrollera om “Fiksers” position är korrekt.
DK	Kontroller om “Fikernes” placering er korrekt.
FIN	Tarkista “Fikseri”, että asento on oikein.
PT	Ver se a posição dos “Fiksers” é correcta.
ES	Revise si los “Fiksers” se encuentran en la posicion correcta.
IT	Controllare gli inserti antisfilo “Fiksers” sono OK.
GR	Ελέγξτε αν τα εξαρτήματα αγκύρωσης που διαθέτει ο σύνδεσμος “Fiksers” έχουν αγκυρώσει σωστά πάνω στον αγωγό.
CZ	Zkontrolovat správnou polohu fixerů.
HU	Ellenőrizze, hogy a “Fikser”-ek megfelelő helyzetben vannak-e.
RO	Se verifica daca pozitia elementelor de fixare “Fiksers” este corecta.
PL	Sprawdź poprawność ułożenia blaszek.
RUS	Убедиться в правильности установки “Fiksers” (металлических фиксаторов).

DN625-DN825/08-20/ML

User manual ST-System

Georg Fischer Waga N.V.

+GF+

GB	User Manual
D	Montageanleitung
NL	Montagehandleiding
F	Manuel d'instruction
NO	Brukermanual
SE	Användarmanual
DK	Montagevejledning
FIN	Käyttömanuaali
ES	Manual de instalacion
PT	Manual de instalação
IT	Manuale D'uso
RO	Manualul utilizatorului
CZ	Návod k montáži
GR	Εγχειρίδιο χρήσης
HU	Szerelési utasítás
RUS	Руководство по установке
PL	Instrukcja Obsługi

ST-System
DN40-DN2200

Georg Fischer Waga N.V.-P.O.Box 290-
8160 AG Epe-The Netherlands-www.waga.nl

User Manual ST-System/0418/ML

01 **CHECK TABLE FOR MAX. RANGE OF DEDICATED FITTING.**

DN (mm)			Range (mm)		
DN40	-	DN80	+ 2		- 1
DN100	-	DN200	+ 2		- 1,5
DN250	-	DN500	+ 4		- 3
DN600	-	DN1100	+ 5		- 4
DN1200	-	DN1600	+ 5,5		- 5
DN1700	-	DN2200	on request		

THE ST-SYSTEM IS A TAILOR MADE SOLUTION.
IT IS PRODUCED ON CUSTOMER SPECIFICATION ONLY.

User Manual ST-System/07-20

02

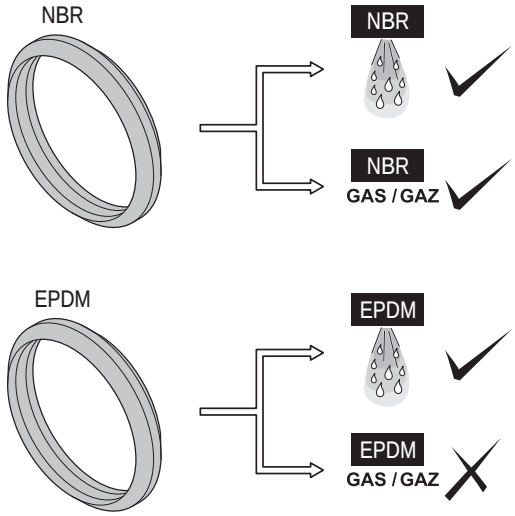

Water = 10, 16 or 25 bar*
Gas = 4 bar*
* Depends on ordered dedicated fitting.

03

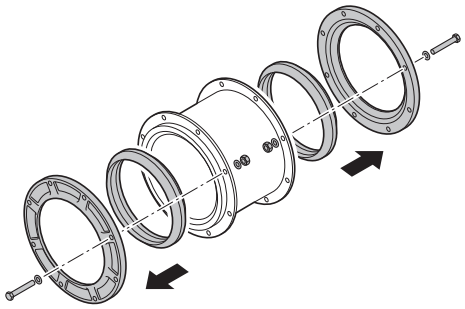

User Manual ST-System/0418/ML

04

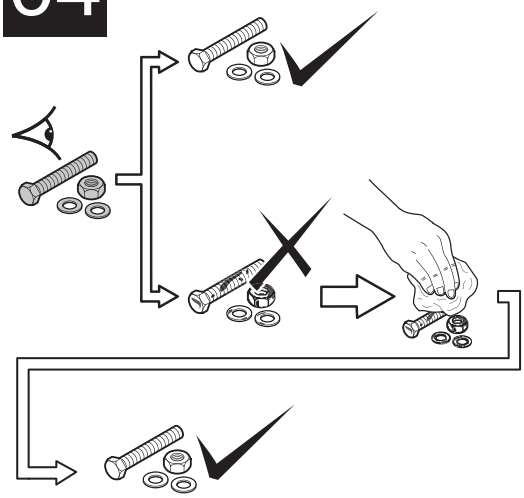

05

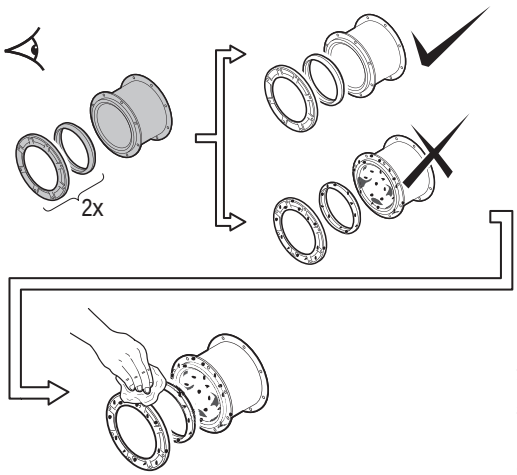

User Manual ST-System/0418/ML

06 REMOVE ALL RUST, DIRT, BURRS, DAMAGES AND ALL FINISHING LAYERS FROM THE PIPE. MOUNT ON MEDIUM CARRYING PIPE MATERIAL ONLY.

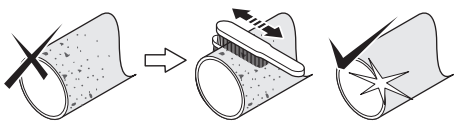

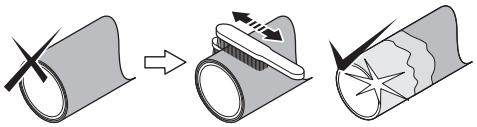

D Von der drucktragenden Rohroberfläche allen Rost, Grat, Schmutz, Schäden und alle Beschichtungen entfernen.

NL Verwijder alle roest, vuil, bramen, beschadigingen en buislagen. Monteer alleen op de mediumvoerende buis.

F Eliminez la rouille, la saleté, les bourrelets de soudures, les défauts de surface et toutes les couches de finition du tube. Assemblez seulement sur le matériau principal du tube.

NO Fjern all rust, løs overflate samt skader på materialet og overflatebehandling.

SE Avlägsna all rost, smuts, grader och eventuell ytbehandling från röret. Montera endast på mediabärande rörmaterial.

DK Fjern al rust, snavs, spåner, beskadigelser og alle belægninger på røret. Monter kun på selve det mediebærende rør.

FIN Poista kaikki ruoste, lika, taite, vauriot ja kasaumat putkesta. Asenna ainoastaan keskivahvalle putkelle.

PT Remover oxidação, sujidade, rebarbas, e revestimento do tubo.

HU Távolítson el minden rozsdát, szennyeződést, sorját, sérüléseket és minden fedőréteget a csőről. Csak közvetlenül a közeg szállító csőanyagra helyezze fel az idomot.

ES Retirar toda la suciedad, polvo, daños y etiquetas de la tuberia. Montar solamente entre tubos.

IT Rimuovere sporcizia, polvere, intagli e gli strati superficiali della tubazione. Il montaggio deve avvenire sullo strato a contatto del fluido trasportato.

GR Καθαρίστε όλα τα οξειδωμένα τμήματα, τις επικαθίσεις, τις παραμορφώσεις και τις υλικές βλάβες της επιφάνειας του αγωγού καθώς και τις επιστρώσεις του αγωγού μέχρι τον αγωγό μεταφοράς του υλικού.

CZ Odstranit všechny nečistoty, rez, otřepy a všechny dodatečné vrstvy z povrchu trubky. Montovat pouze na trubky určené pro transport médií.

RO Indepartati praful, crestaturile, murdaria, defectele precum si toate straturile de acoperire de pe teava. Se monteaza doar pe materialul conductei.

PL Usuń wszelkiego rodzaju uszkodzenia, zabrudzenia, zadrapania, rdzę i wierzchnie warstwy na długości rury pokrytej przez łącznik.

RUS Удалить любые загрязнения, ржавчину, задиры и наплывы, а так же покрытия с поверхности трубы. Устанавливать только на основной материал трубы.

User Manual ST-System/0418/ML

07 CHECK TABLE FOR MINIMUM INSERTION DEPTH (X).

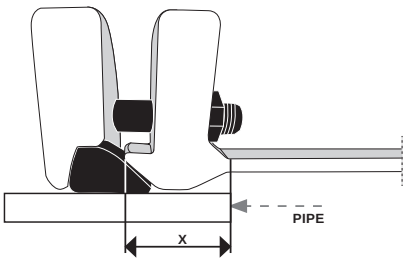

DN	X min.insertion depth (mm)
DN100	30
DN125	30
DN150	35
DN200	35
DN250	45
DN300	45
DN350	45

DN	X min.insertion depth (mm)
DN400	45
DN500	50
DN600	60
DN700	60
DN800	70
DN900	70
DN1000	70

DN	X min.insertion depth (mm)
DN1200	90
DN1300	90
DN1400	95
DN1500	95
DN1600	100

D Aus der Tabelle die Einstecktiefe entnehmen.

NL Zie de tabel voor de minimale insteekdiepte (X).

F Vérifiez sur le tableau la profondeur d'insertion correcte du tube.

NO Sjekk med tabell for korrekt innstikksdybde (X).

SE Kontrollera i tabellen korrekt insticksdjup (X).

DK Kontroller med tabellen for korrekt indstiksdybde (X).

FIN Tarkista taulukosta oikea asennus syvyys.

PT Ver na tabela a profundidade (X) de inserção do tubo no acessório.

ES Ver tabla para la profundidad de inserción minima.

IT Controllare sulla tabella la profondità di inserimento (X).

GR Συμβουλευτείτε τον πίνακα για την υπόδειξη του κατάλληλου βάθους εισαγωγής (X) του συνδέσμου στον αγωγό.

CZ Zkontrolovat v tabulce správnou hloubku zasunutí (X).

HU Ellenőrizze a táblázatot a megfelelő betolási mélység érdekében (X).

RO Se verifica in tabel adancimea corecta de inserare (X).

PL Korzystając z tabeli określ głębokość nasunięcia łącznika (X).

RUS Проверить по таблице значение глубины ввода трубы (X).

User Manual ST-System/0418/ML

08

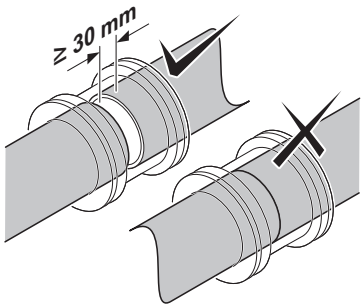

09

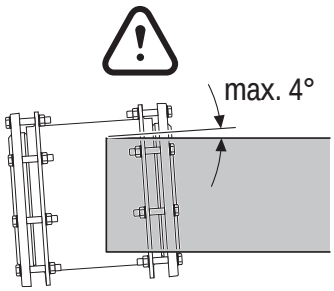

10

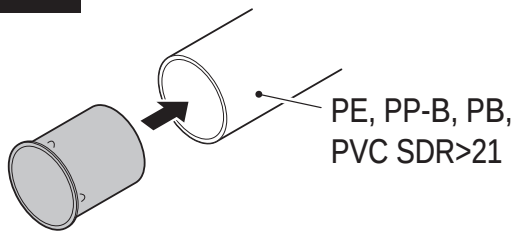

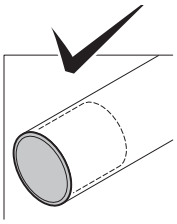

User Manual ST-System/0418/ML

11

USE AN (BY GEORG FISCHER) APPROVED SCRAPING TOOL.

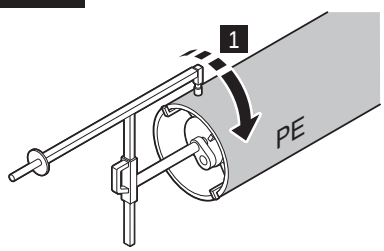

GAS / GAZ

D	Für PE-Rohre ist ein Georg Fischer Schälgerät zu verwenden.
NL	Gebruik een door Georg Fischer goedgekeurde schiller.
F	Utilisez un grattoir mécanique approuvé par Georg Fischer.
NO	Bruk skrapeverktøy godkjent av Georg Fischer.
SE	Använd ett (av Georg Fischer) godkänt skrapverktyg.
DK	Brug et (af Georg Fischer) godkendt skrabeværktøj.
FIN	Käytä (Georg Fischer) hyväksymää karhennus työkalua.
PT	Usar uma ferramenta (Georg Fischer) adequada.
ES	Utilizar un rascador circular Georg Fischer.
IT	Utilizzare in raschiatore approvato da Georg Fischer.
GR	Για τις εργασίες καθαρισμού και λείανσης χρησιμοποιείστε το κατάλληλο (από την GF) εργαλείο.
CZ	Použít škrabku (schválenou Georg Fischer).
HU	Használjon (GF által jóváhagyott) hántoló szerszámot.
RO	Se va utiliza un dispozitiv de raschetat recomandat (de GF).
PL	Użyj skrobaka (Georg Fischer) do przygotowania rury.
RUS	Использовать только разрешенный (компанией Georg Fischer) инструмент для зачистки.

User Manual ST-System/0418/ML

12 CORRECT POSITION OF THE CLAMP RING AND GASKET

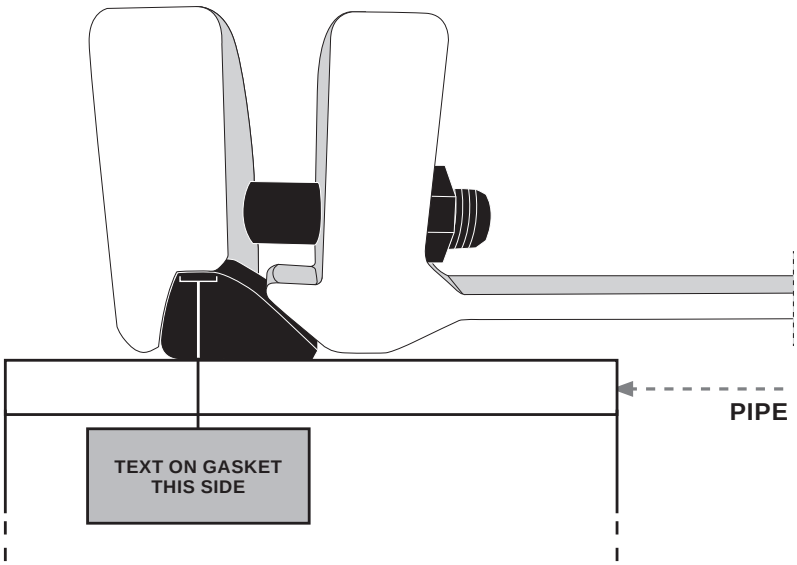

User Manual ST-System/0418/ML

13 APPLY SUITABLE GREASE

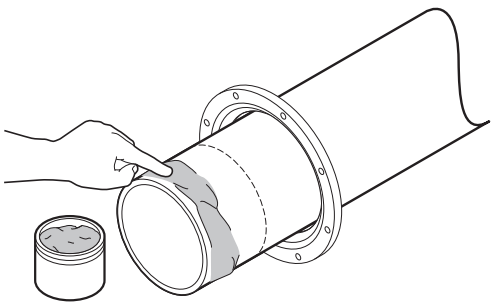

GAS / GAZ

D	Für die Gasanwendung den Dichtungsbereich ausreichend mit Gleitmittel versehen.
NL	Smeer in met een geschikt glijmiddel.
F	Lubrifiez avec une graisse appropriée.
NO	Bruk egnet glidemiddel.
SE	Applicera lämpligt smörjmedel.
DK	Påfør egnet glidemiddel.
FIN	Lisää soveltuva rasva.
PT	Aplicar lubrificante adequado (nunca de origem mineral).
ES	Aplicar la grasa correspondiente.
IT	Applicare lubrificante opportuno.
GR	Τοποθετήστε κατάλληλη ποσότητα λιπαντικής ουσίας στα μηχανικά μέρη του συνδέσμου.
CZ	Aplikovat vhodné mazivo.
HU	Használjon megfelelő kenőanyagot.
RO	Se aplica lubrifiant.
PL	Nałóż warstwę smaru.
RUS	Использовать только подходящую смазку.

User Manual ST-System/0418/ML

14

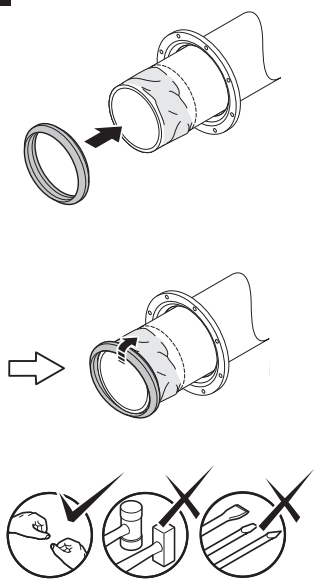

15

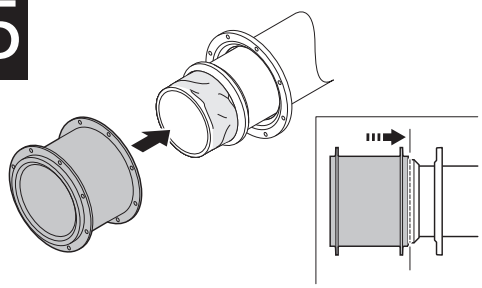

16

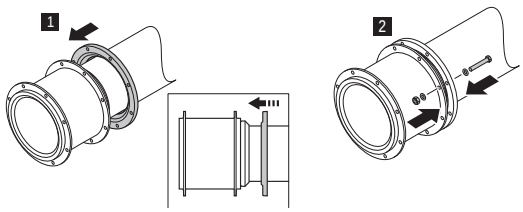

User Manual ST-System/0418/ML

17 CHECK TABLE FOR CORRECT TORQUE.

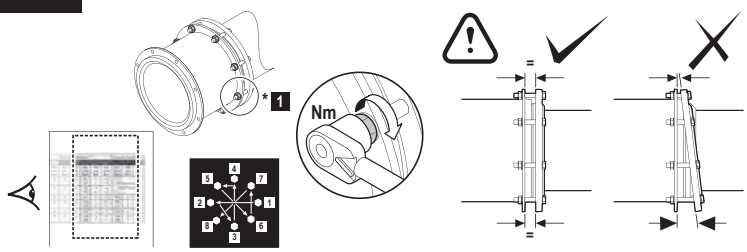

Bolts	Torque (Nm)
M16	55
M20	110
M24	190
M27	280
M30	380

D	Der Tabelle das richtige Schraubendrehmoment entnehmen.
NL	Zie de tabel voor het juiste aandraaimoment.
F	Vérifiez dans les tableaux le couple de serrage à respecter.
NO	Mutrene strammes i kryss, da man skal holde samme avstand mellom koblingshus og trykkflens(gland). Etter-stram med en momentnøkkel ihht. Momenttabell.
SE	Kontrollera i tabell korrekt åtdragningsmoment.
DK	Det rigtige tilspændingsmoment findes i tabellen.
FIN	Tarkista taulukosta oikea vääntömomentti.
PT	Ver na tabela a força de aperto.
ES	Ver tabla para el par de apriete.
IT	Controllare la tabella per il serraggio.
GR	Συμβουλευτείτε τον πίνακα για την επιλογή της κατάλληλης στρεπτικής ροπής που θα πρέπει να εφαρμοστεί στον σύνδεσμο, κατά την διαδικασία της σύσφιξης του στον αγωγό.
CZ	Zkontrolovat v tabulce správný utahovací moment.
HU	Ellenőrizze a táblázatot a megfelelő nyomaték érdekében.
RO	Se verifica in tabel valoarea momentului de stangere.
PL	Odczytaj z tabeli odpowiedni moment dokręcania śrub.
RUS	Проверить по таблице соответствующий момент затяжки болтов.

User Manual ST-System/07-20

18 CONDUCT A PRESSURE TEST.

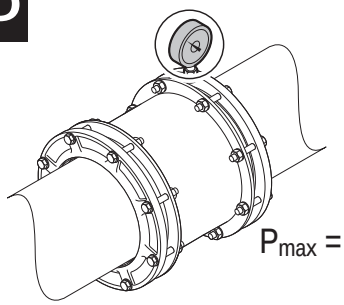

P_{max} = 1.5 x PFA

Water = 10, 16 or 25 bar*
Gas = 4 bar*
* Depends on ordered dedicated fitting.

D	Dichtheitsprüfung durchführen.
NL	Voer een druktest uit.
F	Procédez à un essai de pression.
NO	Utfør trykktest på hele installasjonen, med minimum det aktuelle driftstrykk før anlegget dekkes til.Trykktestingen må ikke overstige 1,5 x PFA (max arbeidstrykk) i henhold til tabellen.
SE	Utför tryckprovning.
DK	Gennemfør en trykprøvning.
FIN	Aseta painetesti.
PT	Efectuar teste de pressão.
ES	Realizar un test de presión.
IT	Fare test in pressione.
GR	Για τον έλεγχο της στεγανότητας της σύνδεσης πραγματοποιείστε δοκιμή υπό πίεση στον αγωγό για τυχόν διαρροές.
CZ	Provést tlakovou zkoušku.
HU	Hajtson végre nyomáspróbát.
RO	Se realizeaza un test de presiune.
PL	Przeprowadź próbę ciśnieniową.
RUS	Провести опрессовку.

User Manual ST-System/0418/ML

19 PRESSURE TEST FAIL => REINSTALL FITTING. TEST OK => INSTALLATION FINISHED.

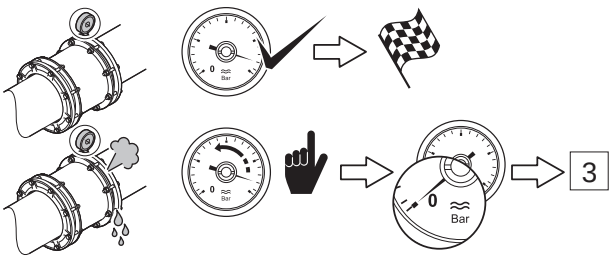

D	Falls die Dichtheitsprüfung eine Undichtheit aufzeigt, den Montagevorgang wiederholen - nach wiederholter, erfolgreicher Dichtheitsprüfung ist die Montage abgeschlossen.
NL	Druktest negatief => opnieuw installeren. Test OK => installatie gereed.
F	Mauvais résultat d'essai, réinstallez le raccord. Essai réussi, l'installation est terminée.
NO	Trykkprøving negativ => Re-installer kobling. Test OK => installasjon er utført.
SE	Tryckprovning falerar => Ommontera rördelen. Test OK => installation avslutad.
DK	Trykprøvning negativ => Re-installer kobling. Test OK => installationen er udført.
FIN	Paine testi hylätty=> asenna uudelleen. Testi OK => asennus suoritettu.
PT	Teste de pressão falhou => Voltar a instalar o acessório => Teste OK =>Instalação terminada.
ES	Test de Presion Fallo => Reinstalar el accesorio TEST OK=> Instalacion completada
IT	Se test negativo => Reinstallare. Se test positivo => Installazione finita.
GR	Σε περίπτωση που η εγκατάσταση αποτύχει και υπάρχει διαρροή στη σύνδεση => Επανα-εγκαταστήσετε το σύνδεσμο. Σε περίπτωση που η δεν παρατηρηθεί διαρροή στη σύνδεση=> η εγκατάσταση του συνδέσμου επί του αγωγού έχει ολοκληρωθεί με επιτυχία.
CZ	Tlaková zkouška není OK => tvarovku znovu namontovat. Tlaková zkouška OK => konec instalace.
HU	Nyomás próba sikertelen => végezze el újra az idom felhelyezését. Próba sikeres => felhelyezés befejezve.
RO	Daca testul de presiune esueaza => Se reinstaleaza fitingul. Daca rezultatul testului este OK => Instalare terminata.
PL	Nieudana próba => Ponowny montaż łącznika. Udana próba => montaż zakończony.
RUS	Опрессовка не пройдена => Установить фитинг снова. Опрессовка пройдена => Установка завершена.

User Manual ST-System/0418/ML

User manual Multi/Clamp

Multi/Clamp

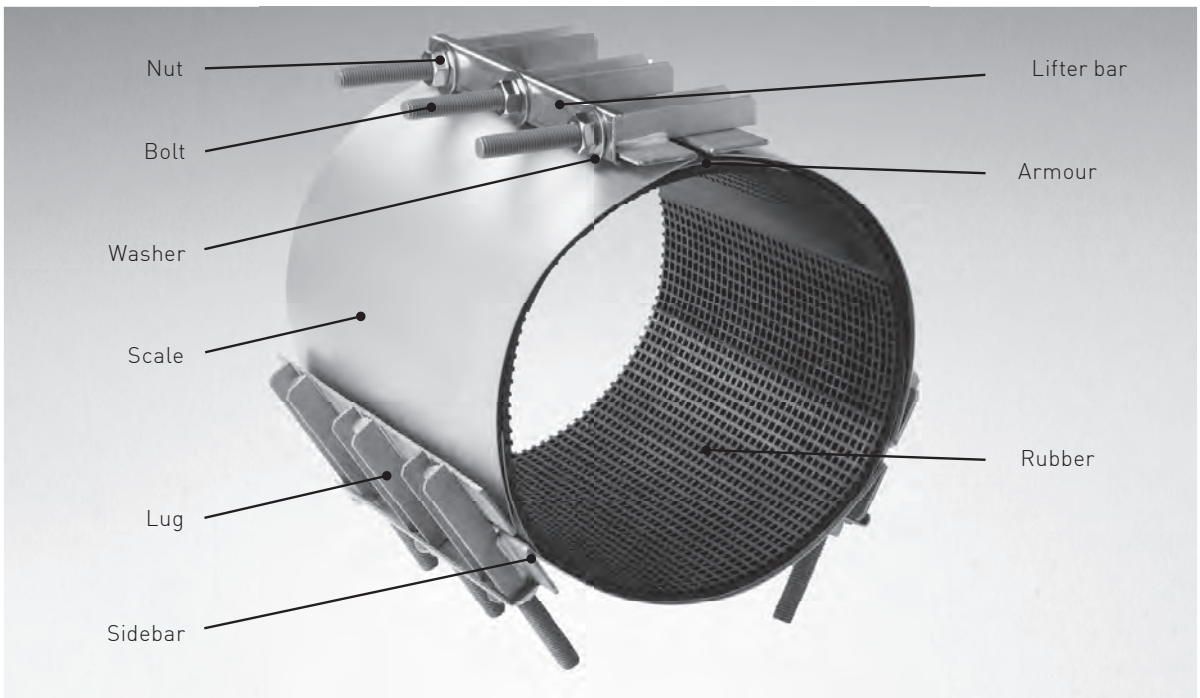

Multi/Clamp Single (1)

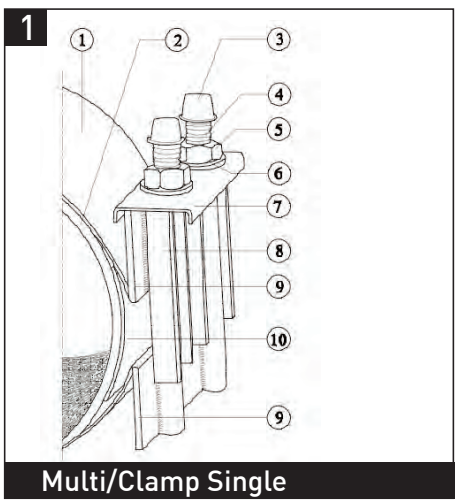

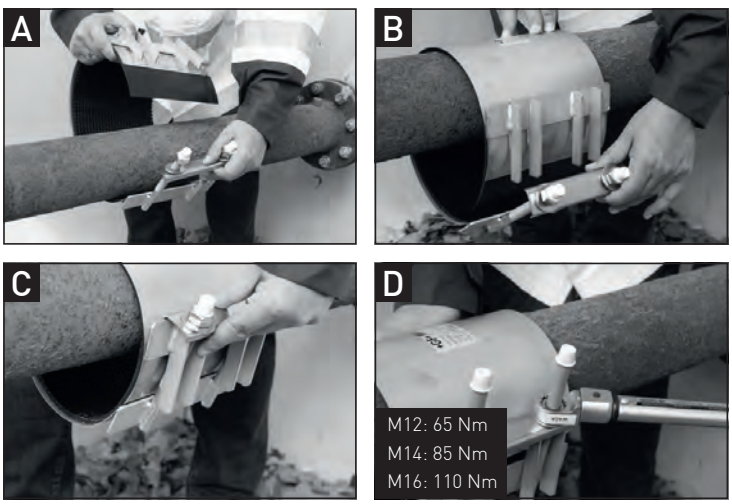

Double and Triple (2), Flange (3)

2

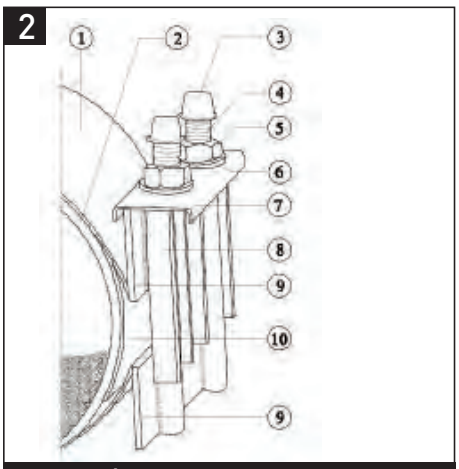

Multi/Clamp Double and Triple

E

F

G

H

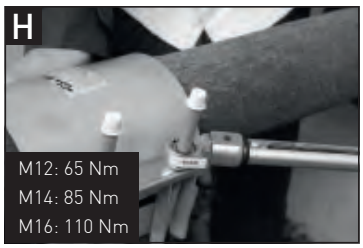

M

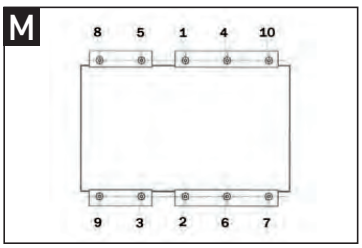

3

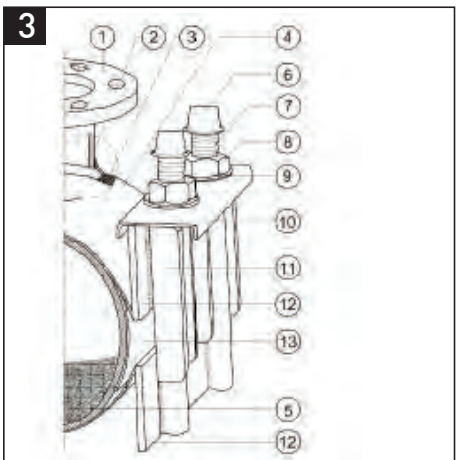

Multi/Clamp Flange

I

J

K

L

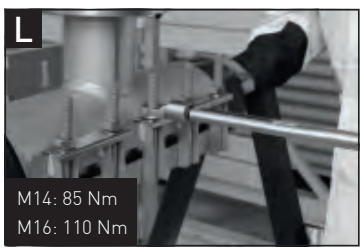

N

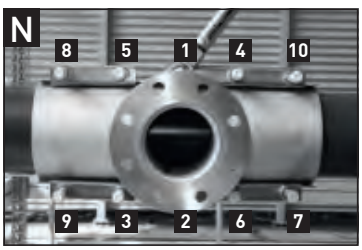

O

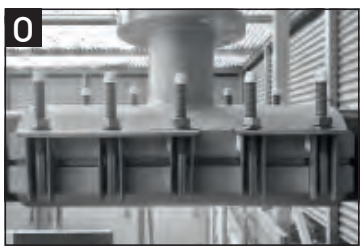

Instruction Manual - Multi/Clamp Single (1), Double and Triple (2) EN

1. Prior to installation

Check the outside diameter of the pipe and make sure that you use the correct clamp dimension.

This clamp may only be installed by authorized installers.

This manual must be read in full before using this product. Liability will be fully rejected by incorrect use or incorrect installation of this product.

2. Preparing the clamp

Note the sequence of the pictures on the fold-out page. 1 + 2

Explanation parts
1. Scale, 2. Rubber, 3. Bolt cap, 4. Bolt, 5. Nut, 6. Washer, 7. Lifter bar, 8. Lug, 9. Sidebar, 10. Armour

- Keep threads free of dust, dirt and any other material that could jeopardize proper tightening.
- Untighten nuts to the end of the bolts, but DO NOT REMOVE THEM.

Apply a suitable lubricant to pipe and rubber in upper and lower scale. This is **NOT** necessary for use on plastic pipe. **DO NOT** use oil-based grease on the gasket or pipe. Do not grease the nuts and bolts.

When installed on PVC or other plastic pipes reduce the recommended torque by 50% in order to avoid the gasket being pushed out.

Always consult your supplier before using Multi/Clamp on plastic pipes. On PE and similar plastic pipes Multi/Clamp repair clamps should only be used as a short term repair solution.

Instruction Manual - Multi/Clamp Single (1), Double and Triple (2) EN

3. Preparing the pipe(s)

- Clean the pipe by scraping the pipe and remove dirt and corrosion. The surface has to be smooth.
- Mark the pipe where the ends of the clamp will be. Make sure that the damaged area is located in the middle of the marked section. After installation use this mark to confirm that the clamp has been properly positioned.

4. Installation

Step 1

=> Multi/Clamp Single (1)

- Open up the clamp and wrap it around the pipe (A).
- Position the clamp in such a way that the bolts are conveniently placed for assembly and tightening.

=> Multi/Clamp Double and Triple (2)

- Place the lifter bar of the underscale over the lugs of the upperscale at one side (E).
- Pull the other side of the underscale over the upperscale (F).
- Position the clamp in such a way that the bolts are conveniently placed for assembly and tightening.
- Check the gasket edges along the sleeve top and bottom halves to be sure they overlap and are not folded.

Make sure that no material sticks to the gasket, which could jeopardize proper sealing as the gasket is wrapped and tightened around the pipe.

If during an under pressure installation the leakage pressure is too high, steps 1 and 2 can be performed beside the pipe fracture or damage.

Step 2

- Snap the lifter bar OVER the lugs (C+G). Do not use force. Make sure that the armour slides under the band and that the gasket tails are not folded under but are lying flat around the pipe.

=> Multi/Clamp Single (1)

- Tighten the nuts by hand first, and then use a torque wrench. The pressure on the bolts will slowly move the bridge plate into place over the sidebar edge.

=> Multi/Clamp Double and Triple (2)

- Pull the sidebars towards each other and tighten the nuts by hand first, then use a torque wrench.

Step 3

- Tighten all nuts evenly in 20 Nm increments using a torque wrench (D+H+M) in specified order.
- **Minimum torque:** M12 (SW19): 65 Nm, M14 (SW22): 85 Nm, M16 (SW24): 110 Nm (PVC -50%).
- Maximum torque = 1,2 x minimum torque.
- The gap between the sleeve halves on either side should be the same when nuts are not fully torqued. Torque all nuts evenly (0).

Step 4

After 20 minutes retighten with minimum torque.

5. Testing the installation

Always take safety precautions.

- Always pressure test with no more than the intended working pressure before backfilling. If leakage occurs repeat step 2 and 3, retighten to proper torque according to step 3 and 4. Then pressure test again.
- Backfill carefully around the installed clamp.

Instruction Manual - Multi/Clamp Flange and Thread (3) EN

1. Prior to installation

Check the outside diameter of the pipe and make sure that you use the correct dimension of the clamp.

This clamp may only be installed by authorized installers.

This manual must be read in full before using this product. Liability will be fully rejected by incorrect use or incorrect installation of this product.

2. Preparing the clamp

Note the sequence of the pictures on the fold-out page. 3

Explanation parts
1. Flange, 2. Flange neck, 3. Sealing gasket, 4. Upper scale, 5. Clamp gasket, 6. Bolt cap, 7. Bolt, 8. Nut, 9. Washer, 10. lifter bar, 11. Lug, 12. Sidebar, 13. Armour
- Make sure that the sealing gasket (3) is fitted evenly around the outlet.
- Keep threads free of dust, dirt and any other material that could jeopardize proper tightening.
- Remove nuts, washers and bridge plates from the bolts.

Apply a suitable lubricant to pipe and rubber in upper and lower scale. This is **NOT** necessary for use on plastic pipe. **DO NOT** use oil-based grease on the gasket or pipe. Do not grease the nuts and bolts.

When installed on PVC pipe reduce the recommended torque by 50% in order to avoid the gasket being pushed out.

Always consult your supplier before using Multi/Clamp on plastic pipes. **DO NOT** use Multi/Clamp Flange and Thread on PE and similar plastic pipes.

3. Preparing the pipe(s)

- Clean the pipe by scraping the pipe and remove dirt and corrosion. The surface has to be smooth.
- Mark the pipe where the ends of the clamp will be. After installation use this mark to hat the clamp has been properly positioned.

Instruction Manual - Multi/Clamp Flange and Thread (3) EN

4. Installation

Step 1
- Place the outlet half of the sleeve on the pipe and move into position (I).

Step 2
- Place the underscale in position with the upperscale (J).
- Make sure that no material sticks to the gasket, which could jeopardize proper sealing as the gasket is wrapped and tightened around the pipe.
- Check the gasket edges along the sleeve top and bottom halves to be sure they overlap and are not folded.

Step 3
- Reinstall the lifter bar, washer and nuts and tighten the nuts by hand (K).
- Tighten all nuts evenly in 20 Nm increments using a torque wrench in the specified order (L+N).
- Minimum torque: M14 (SW22): 85 Nm
  M16 (SW24): 110 Nm
- Maximum torque = 1,2 x minimum torque.
- The gap between the sleeve halves on either side should be the same when nuts are not fully torqued. Torque all nuts evenly (O).

Step 4

After 20 minutes retighten with minimum torque.

- If necessary support the flange according to standard codes of practice when heavy accessories are attached to it.

5. Testing the installation

Always take safety precautions.

- Always pressure test with no more than the intended working pressure before backfilling the ditch. If leakage occurs repeat step 2 and 3, retighten to proper torque according to step 3 and 4. Then pressure test again.
- Backfill carefully around the installed clamp.

User manual Insert Stiffener
with wedge

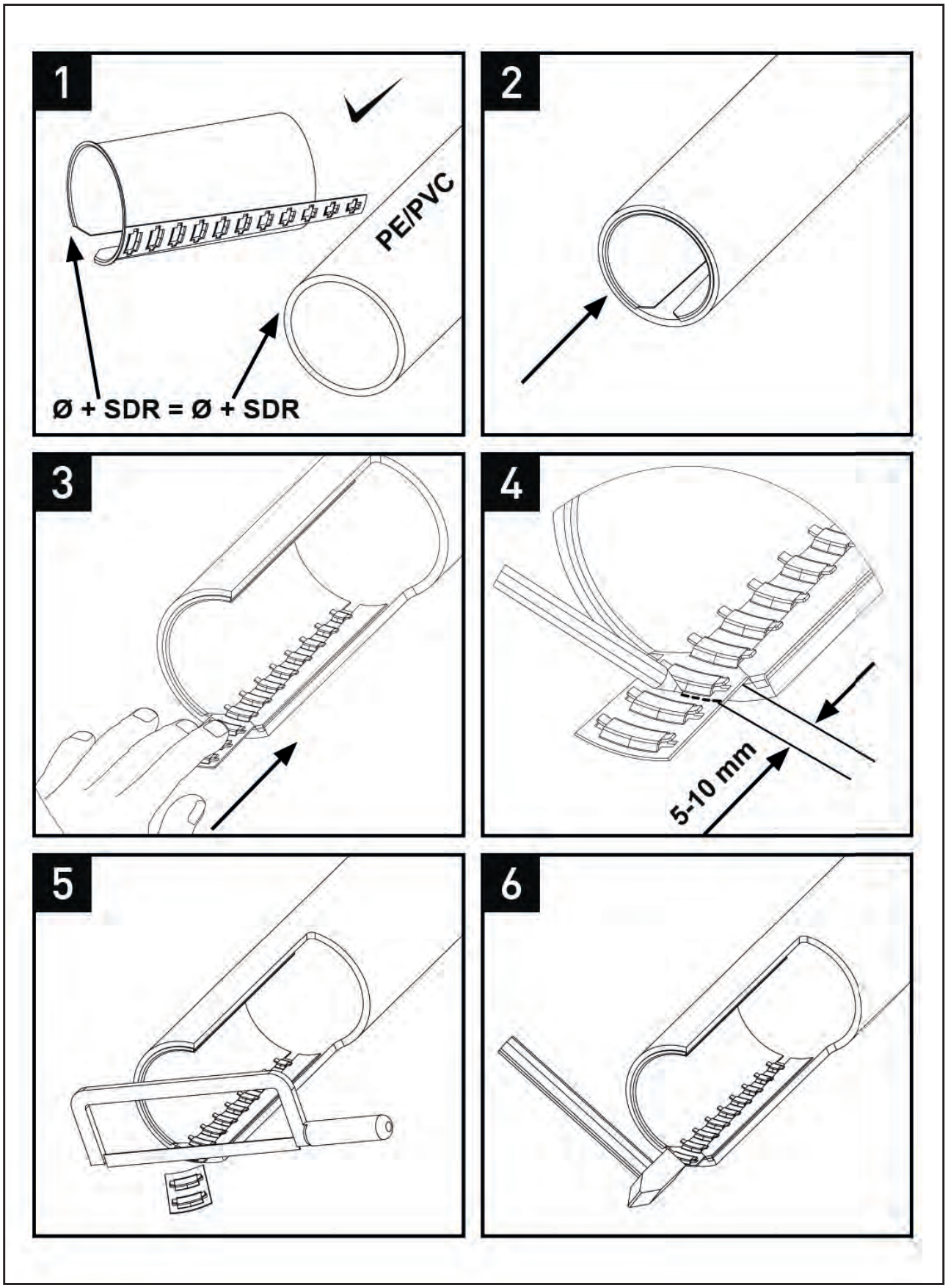

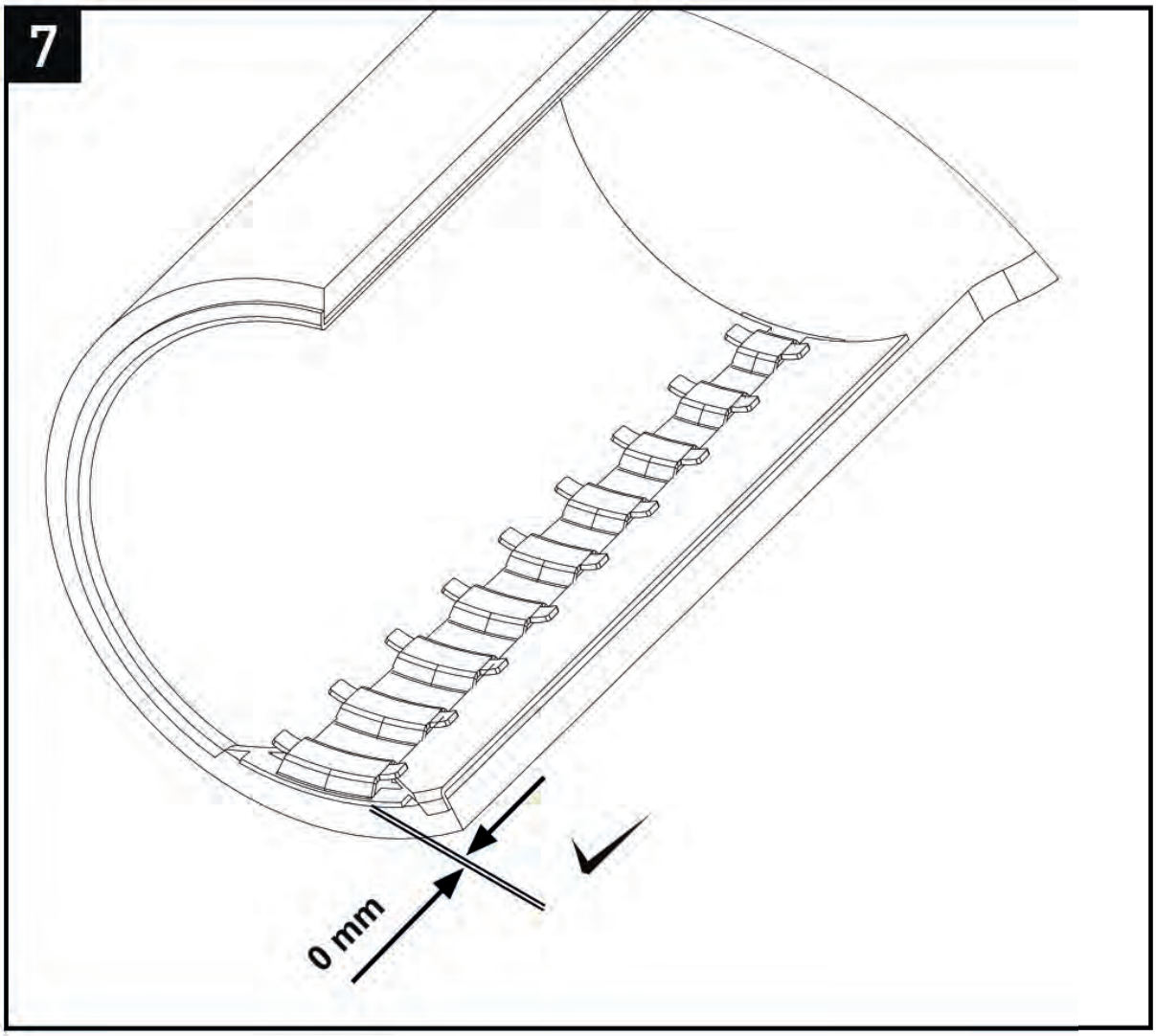
7
0 mm

User manual Insert Stiffener
with wedge MJ DN625 - DN800

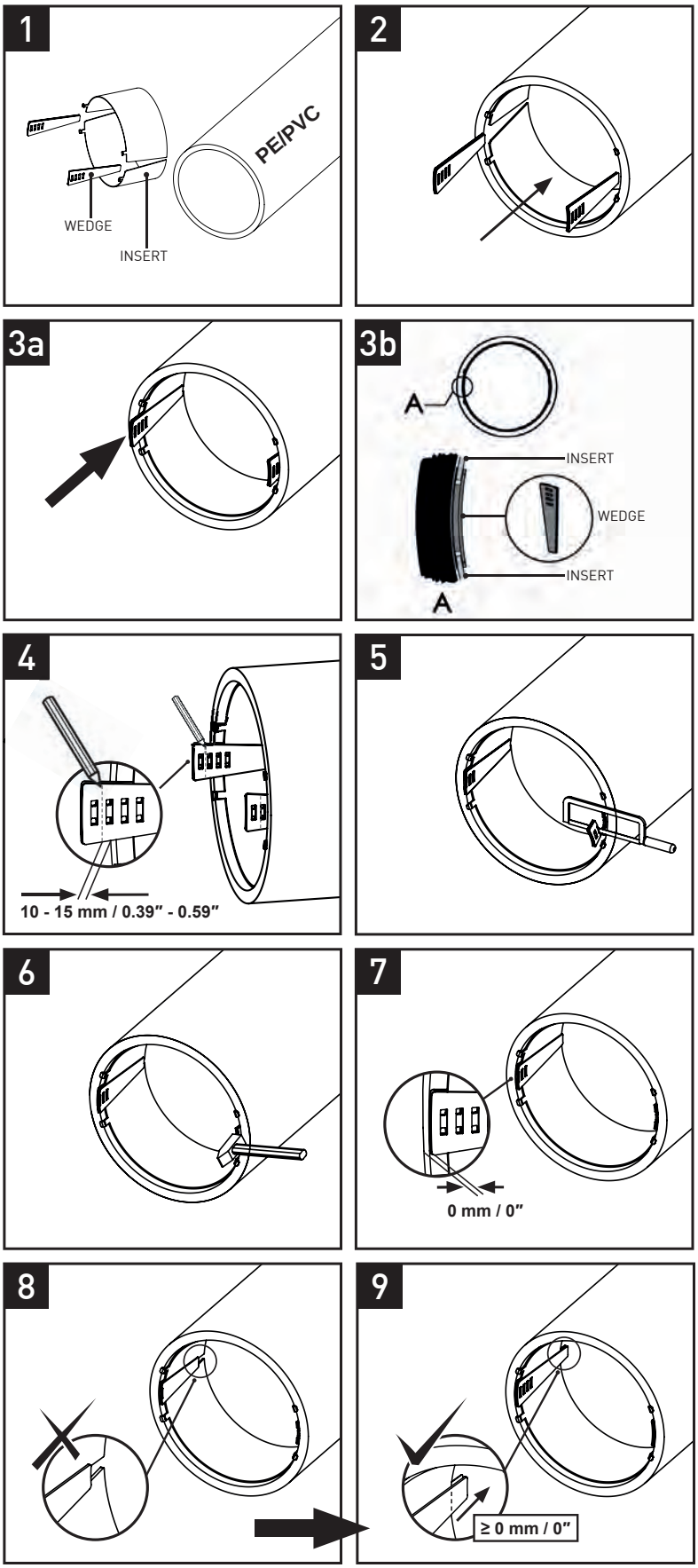

07-2020

+GF+

+GF+

When using a MULTI/JOINT® DN625 till DN800 on plastic pipes, the use of the insert stiffener MJ DN625 - DN800 is mandatory

Tender specifications

MULTI/JOINT® 3000 Plus: tender specifications for water

Tender specification for large tolerance fittings for use in fluids like potable water and sewage & waste water; Georg Fischer WAGA MULTI/JOINT® 3000 Plus or equal.

Scope

This tender specification specifies the requirements for large tolerance couplings, flange adaptors and other fittings (hereinafter called mechanical joints), restraint or non restraint, sized DN50 up to and including DN825, for conveying fluids like potable water, waste water and cooling water, suitable for fluid temperatures between -5˚C and 50˚C, suitable to be installed under and above ground, and inside and outside buildings.

The mechanical joints shall be constructed and certified in conformity with **EN 14525**.

Ranges

The mechanical joints shall be suitable **for all pipe materials**, both metal and non-metal, like PE, PVC, GRP, PB, asbestos cement, copper, steel, galvanized steel, stainless steel AISI 304 and AISI 316, grey cast iron, ductile cast iron and concrete.

Mechanical joints shall be designed to cover following pipe outside diameters per nominal diameter (see table below).

Separated bolt sets

Couplings shall have **separate bolt sets (misaligned DN50-DN200)** for each socket end, enabling connecting 1 pipe end at a time and ensuring optimal bolt torque at each pipe end.

Possibility of changing configuration on the spot

The mechanical joint shall offer the **possibility of changing the configuration** from restraint to non restraint or vice versa at the time of installation, by either inserting or removing gripping elements on the spot.

Ambient temperature at installation

The mechanical joints with EPDM gasket shall be suitable for installation at ambient temperatures between -20°C and +50°C.

DN size	**Min. range** (mm)	**Max. range** (mm)	**Min. length coupling** (mm)	**Min. length flange adaptor**
50	46	71	206	165
65	63	90	215	170
80	84	105	218	170
100	104	132	228	173
125	132	155	240	192
150	154	192	278	211
200	192	232	303	221
225	230	268	350	216
250	267	310	377	264
300	315	356	384	293
350	352	393	380	291
400	392	433	380	297
425	432	464	460	330
450	450	482	460	330
475	481	513	460	360
500	500	532	460	332
550	548	580	460	330
600	605	637	480	339
625	630	662	657	446
675	665	697	660	509
700	709	741	667	434
800	799	831	667	431
825	837	869	667	455

Marking requirements

All mechanical joints shall be legibly and durably marked. **Marks shall be cast on the body** and shall bear at least the following information:

- The manufacturer's name or mark
- Identification of the year of manufacture
- Identification of ductile cast iron
- Identification of DN size
- Identification of the range of external diameters that the mechanical can connect

Marking requirements on rubber gasket

All rubber gaskets shall be legibly and durably marked. The rubber gasket shall bear at least the following information:

- The manufacturer's name or mark
- Identification of the year of manufacture
- Identification of the range of external diameters over which the mechanical joint works
- The type of gasket (EPDM or NBR)
- The EN-standard

Additional information to be supplied with the mechanical joint

The following information shall be supplied **on or with** each mechanical joint:

- Installation instructions
- Maximum joint gap
- Maximum allowable angular deflection (8° per side, based on middle of range)
- Pipe materials for which the mechanical joint is intended to be used with non restrained and restrained joints.
- Need for supporting sleeves (inserts)
- Bolt torque
- Information about reusability of the mechanical joint
- Code for traceability

Quality assurance

- The manufacturer's quality system shall conform to ISO 9001:2015
- The manufacturer's environmental system shall conform to ISO 14001:2015
- The manufacturer's international occupational health and safety management system specification shall conform to ISO 45001:2018

Technical support

Product training and technical information.

- The manufacturer or the sales representative shall provide a specialized theoretical and active practical product training given by qualified instructors to enable installers of the above mentioned products to be able to understand and use the products and associated tooling correctly and efficiently under site conditions.
- In addition to the main subject matter all training courses shall additionally cover other associated distribution pipeline products as well as routine repair and maintenance procedures.
- Additional training courses for inspectors, group leaders and teaching staff are to be provided upon request.
- The manufacturer has to provide accurate and easy-to-understand operating instructions in at least one internationally recognized language, which can be used at any subsequent time for reference purposes.
- The manufacturer must have in-house test facilities to execute basic tests.

Hygienic packaging / protection from production to point of use

The manufacturer shall supply the product with a hygienic packaging / protection. The hygienic packaging / protection will be applied during the production / assembly process. The hygienic packaging / protection shall protect the product from dirt, dust and other contaminants during transport and storage till point of use where the hygienic packaging / protection will be removed.

Certification

Products shall bear the EN 14525 certificate of KIWA (BRL-775), ÖVGW (QS-W 503) and SVGW.
Products shall bear the NSF 61 certificate of NSF.
Products with NBR gasket shall bear the Watermark of KIWA for use in potable water.

Material specifications

Body & clamp rings:	All metal parts, except the gripping elements, shall be made of ductile cast iron in conformity with **EN-GJS-450-10-HB200**.
Coating:	Coating shall be a **Resicoat® RT9000R4 epoxy powder coating** or equal, with a **minimum layer thickness of 250 micron** and chemical resistance of pH 2 up to pH 13. **Coating shall be approved by an internationally accepted institute for potable water or other fluids (e.g. WRc, KIWA, DVGW)** and shall be certified **according the requirements of GSK (Association for Excellent Corrosion Protection with Epoxy resin powder coating)** in accordance with DIN 3476 (P), DIN 30677-2 and EN 14901.
Bolts, Nuts, washers:	Bolts, nuts and washers shall be made of stainless steel A2-70 (AISI 304) or A4-80 (AISI 316). Bolts shall have a **non-chemical dry anti-friction coating to prevent cold- welding** due to fretting. Nuts are galvanized and passivated to prevent galling.
Rubber gasket:	EPDM according to **EN 681-1**, for the **type WA** for cold potable water supply up to 50°C. NBR according to **EN 682** for cold (non) potable water supply, drainage, sewerage and rainwater pipes (continuous flow up to 45°C) with oil resistance.
Gripping elements:	Gripping elements shall be made of stainless steel.
Flanges:	Flanges shall be constructed in such a way that they can be attached to flanges from which the dimensions and tolerances comply to **EN 1092-2**. Flange face shall have concentric grooves. For optimal seal positioning and sealing.
Pressures:	Non restraint: Max. working pressure: 25 bar / 16 bar. Restraint: Max. working pressure: 16 bar / 10 bar. Depending on DN-size and / or pipe material.
Angular deflection:	8° per side, based on middle of range.

MULTI/JOINT® 3000 Plus: tender specifications for gas

Tender specification for large tolerance fittings for use in gas; Georg Fischer Waga MULTI/JOINT® 3000 Plus or equal.

Scope
This tender specification specifies the requirements for large tolerance couplings, flange adaptors and other fittings (hereinafter called mechanical joints), restraint or non restraint, sized DN50 up to and including DN600, for conveying gaseous fuels (gas or natural gas), suitable for temperatures between -5° C and 50° C, suitable to be installed under and above ground and inside and outside buildings. The mechanical joints shall be constructed and certified in conformity with EN 14525.

Ranges
The mechanical joints shall be suitable for all pipe materials, both metal and non-metal, like PE, PVC, GRP, PB, asbestos cement, copper, steel, galvanized steel, stainless steel AISI 304 and AISI 316, grey cast iron, ductile cast iron and concrete. Mechanical joints shall be designed to cover pipe outside diameters per nominal diameter (see table).

Separated bolt sets
Couplings shall have separate, misaligned (DN50-DN200), bolt sets for each socket end, enabling connecting 1 pipe end at a time and ensuring optimal bolt torque at each pipe end.

Possibility of changing configuration on the spot
The mechanical joint shall offer the possibility of changing the configuration from restraint to non restraint or vice versa at the time of installation, by either inserting or removing gripping elements on the spot.

Marking requirements
All mechanical joints shall be legibly and durably marked. Marks shall be cast on the body and shall bear at least the following information:

- The manufacturer's name or mark
- Identification of the year of manufacture
- Identification of ductile cast iron
- Identification of DN size
- Identification of the range of external diameters that the mechanical joint can connect

Marking requirements on rubber gasket
All rubber gaskets shall be legibly and durably marked. The rubber gasket shall bear at least the following information:

- The manufacturer's name or mark
- Identification of the year of manufacture
- Identification of the range of external diameters over which the mechanical joint works.

Ranges

DN-size	Min. range (mm)	Max. range (mm)	Min. length coupling (mm)	Min. length flange adaptor (mm)
DN50	46	71	206	165
DN65	63	90	215	170
DN80	84	105	218	170
DN100	104	132	228	173
DN125	132	155	240	192
DN150	154	192	278	211
DN200	192	232	303	221
DN225	230	268	350	216
DN250	267	310	377	264
DN300	315	356	384	293
DN350	352	393	380	291
DN400	392	433	380	297
DN425	432	464	460	330
DN450	450	482	460	330
DN475	481	513	460	360
DN500	500	532	460	332
DN550	548	580	460	330
DN600	605	637	480	339

- The type of gasket (NBR)
- The EN-standard

Additional information to be supplied with the mechanical joint

The following information shall be supplied on or with each mechanical joint:

- Installation instructions
- Maximum joint gap
- Maximum allowable angular deflection (8° per joint side, based on middle of range)
- Pipe materials for which the mechanical joint is intended to be used with non-restrained and restrained joints
- Need for supporting sleeves (inserts)
- Bolt torque
- Information about re-usability of the mechanical joint
- Code of traceability

Quality assurance

- The manufacturer's quality system shall conform to ISO 9001:2015
- The manufacturer's environmental system shall conform to ISO 14001:2015
- The manufacturer's international occupational health and safety management system specification shall conform to ISO 45001:2018

Technical support

Product training and technical information.

- The manufacturer or the sales representative shall provide a specialized theoretical and active practical product training given by qualified instructors to enable installers of the above mentioned products to be able to understand and use the products and associated tooling correctly and efficiently under site conditions.
- In addition to the main subject matter all training courses shall additionally cover other associated distribution pipeline products as well as routine repair and maintenance procedures.
- Additional training courses for inspectors, group leaders and teaching staff are to be provided upon request.
- The manufacturer has to provide accurate and easy-to-understand operating instructions in at least one internationally recognized language, which can be used at any subsequent time for reference purposes.
- The manufacturer must have in-house test facilities to execute basic tests.

Hygienic packaging / protection from production to point of use

- The manufacturer shall supply the product with a hygienic packaging / protection. The hygienic packaging / protection will be applied during the production / assembly process. The hygienic packaging / protection shall protect the product from dirt, dust and other contaminants during transport and storage till point of use where the hygienic packaging / protection will be removed.

Certification

Products shall bear the KIWA / GASTEQ AR 208 certificate.

Material specifications

Body & clamp rings:	All metal parts, except the gripping elements, shall be made of ductile cast iron in conformity with EN-GJS-450-10-HB200.
Coating:	Coating shall be a Resicoat® RT9000R4 epoxy powder coating or equal, with a minimum layer thickness of 250 micron and chemical resistance of pH 2 up to pH 13. Coating shall be approved by an internationally accepted institute for gas or other fluids (e.g. WRc, KIWA, DVGW) and shall be certified according the requirements of GSK (Association for Excellent Corrosion Protection with Epoxy resin powder coating) in accordance with DIN 3476 (P) and EN 14901.
Bolts, Nuts, washers:	Bolts, nuts and washers shall be made of stainless steel A2-70 (AISI 304) or A4-80 (AISI 316). Bolts shall have a non-chemical dry anti-friction coating to prevent cold- welding due to fretting. Nuts are galvanized and passivated to prevent galling.
Rubber gasket:	NBR according to EN 682 for gaseous fuel (type GB for hydrocarbon fluids and gaseous fuel).
Gripping elements:	Gripping elements shall be made of stainless steel.
Flanges	Flanges shall be constructed in such a way that they can be attached to flanges from which the dimensions and tolerances comply to EN 1092-2. Flange face shall have concentric grooves. For optimal seal positioning and sealing.
Pressures:	Non restraint: Max. working pressure: 8 bar. Restraint: Max. working pressure: 8 bar / 5 bar. Depending on DN-size and / or pipe material.
Angular deflection:	8° per side, based on middle of range.

ST-System: tender specifications for water & gas

Tender specification for dedicated-sized fittings for use in fluids like potable water, sewage & waste water and gas; Georg Fischer Waga ST-System or equal.

Scope

This tender specification specifies the requirements for dedicated sized couplings, flange adapters and other fittings (hereinafter called mechanical joints), sized DN40 up to and including DN2200, for conveying fluids like potable water, waste water, cooling water and gas, suitable for fluid temperatures between 0° C and 50° C, suitable to be installed under and above ground, and inside and outside buildings. The mechanical joints shall be constructed in conformity with ISO 2531.

Separated bolt sets

On each end of the coupling a separated bolt set will provide an optimal connection to every pipe material.

Quality assurance

- The manufacturer's quality system shall conform to ISO 9001:2015.
- The manufacturer's environmental system shall conform to ISO 14001:2015.
- The manufacturer's international occupational health and safety management system specification shall conform to ISO 45001:2018.

Technical support

- The manufacturer must be able to give technical support and product training by qualified personnel.
- The manufacturer must have in-house test facilities to execute basic tests.

Material specifications

Body & clamp rings:	Steel ST 37-2 (S 235 JR G2) acc. DIN/EN 17100.
Coating:	Coating shall be a Resicoat® RT 9000 R4 epoxy powder coating or equal, with a minimum layer thickness of 250 micron and chemical resistance of pH 2 up to pH 13. Coating shall be approved by an internationally accepted institute for potable water or other fluids (e.g. WRc, KIWA, DVGW) and shall fulfill the requirements of GSK (European quality association for heavy duty corrosion protection).
Bolts, Nuts:	Stainless steel A2 (AISI 304).
Rubber gasket:	NBR (Perbunan) for usage in water and gas. EPDM for usage in potable water.Rubber should be approved by an internationally accepted institute for portable water (e.g. DVGW, WRc).
Flanges	Flanges shall be constructed in such a way that they may be attached to flanges whose dimensions and tolerances comply with EN1092-2.
Pressures:	Max. working pressure: 10, 16 bar or 25 bar for water. Max. working pressure: 4 bar for gas.
Minimum built-in length:	300 mm for all sizes.

Multi/Clamp: tender specifications for water & gas

Tender specification for stainless steel repair clamps, tapping tees and tapping saddles for use in water and gas.

Scope

This tender specification specifies the requirements for repair clamps, tapping tees and tapping saddles for outside pipe diameters 15mm - 1000mm for pipes conveying fluids like potable water, waste water and gas, suitable for fluid temperatures between -10˚C and 70˚C, suitable to be installed under and above ground, and inside and outside buildings.

Quality assurance

- The manufacturer's quality system shall conform to ISO 9001.
- The manufacturer's environmental system shall conform to ISO 14001.

Certification

ACS (France), WRAS (United Kingdom).

Material specifications

Material:	All metal parts are stainless steel AISI 304 or stainless steel AISI 316L. All metal parts are deburred and passivated after the welding process to restore the corrosion resistance to its original state.
Bolts, Nuts and washers:	Bolts, nuts and washers shall be made of stainless steel AISI 304 or AISI 316. Bolts shall have no anti-friction coating. Nuts are galvanized and passivated to prevent cold-welding due to fretting. Plastic caps on thread to prevent nuts and washers falling off during transport. Stainless steel washer AISI 304 or AISI 316 between nut and lifter bar to prevent galling.
Rubber gasket:	Potable water: EPDM according to EN 681-1 (-10˚C up to +55°C). Water and gas: NBR according to EN 682 (-10˚C up to +70°C). The rubber is tapered with a waffle profile and is fully circled. Seamless rubber lining for every clamp diameter. Rubber is fixed to the stainless steel clamp with special tape. This tape is flexible and reinforced with glass fiber to withstand hot and humid conditions and guarantee a long storage capability.
Armour:	Vulcanized into the rubber gasket.
Lifter bar:	U shaped. Bolt holes in the lifter bar are adjusted to the bolt size, no oversize bolts.
Thread:	According BSP (ISO 228).
Flanges:	Flanges shall be constructed in such a way that they can be attached to flanges from which the dimensions and tolerances comply to EN 1092-2.
Pressures:	Max. working pressure: up to 16 bar water. Max. working pressure: up to 8 bar gas.

Product range

Table of contents		Page
	MULTI/JOINT® 3000 Plus	108
	MULTI/JOINT® Accessories	135
	ST-System Fittings	142
	Multi/Clamp	146
	W400/W410 drilling devices	174
	UNI-Coupling - stainless steel couplings	180
	Index	200

MULTI/JOINT® 3000 Plus

MULTI/JOINT® 3000 Plus (DN50 - DN825)

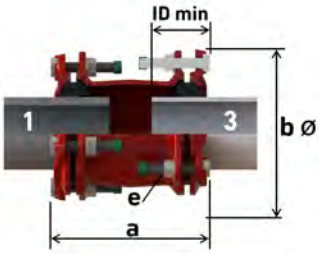

MULTI/JOINT® 3000 Plus Wide Range
Coupling, non restraint

Model:

- Suitable for all kinds of pipe material
- Suitable for water and gas
- Ductile cast iron GGG45 body and clamping ring(s), acc. to EN-GJS-450-10
- RESICOAT® epoxy powder coating, according to GSK standards and EN 14901
- NBR or EPDM gasket, NBR acc. to EN 682 (-5°C up to +50°C), EPDM acc. to EN 681-1 (0°C up to +50°C)
- Angular deflection of max. 8° per socket at installation (based on the middle of the range)
- Stainless steel A2 quality (AISI 304) or A4 quality (AISI 316) bolts, nuts and washers
- Hygiene protection included DN50 - DN825

Installation instruction:

- Read the user manual
- For all plastic pipes, the use of an insert stiffener (see accessories) is recommended and in some cases mandatory. Check our technical information.

Note:

ID min. = minimum insertion depth

DN (mm)	Range 1 (mm)	Range 3 (mm)	NBR / A2 Code	EPDM / A2 Code	NBR / A4 Code	EPDM / A4 Code	Weight (kg)
50	46 - 71	46 - 71	**709 301 210**	**709 301 610**	**709 301 010**	**709 301 310**	4.900
65	63 - 90	63 - 90	**709 301 212**	**709 301 612**	**709 301 012**	**709 301 312**	5.800
80	84 - 105	84 - 105	**709 301 214**	**709 301 614**	**709 301 014**	**709 301 314**	7.500
100	104 - 132	104 - 132	**709 301 216**	**709 301 616**	**709 301 016**	**709 301 316**	9.200
125	132 - 155	132 - 155	**709 301 218**	**709 301 618**	**709 301 018**	**709 301 318**	12.100
150	154 - 192	154 - 192	**709 301 220**	**709 301 620**	**709 301 020**	**709 301 320**	17.400
200	192 - 232	192 - 232	**709 301 224**	**709 301 624**	**709 301 024**	**709 301 324**	29.800
225	230 - 268	230 - 268	**709 301 226**	**709 301 626**	**709 301 026**	**709 301 326**	40.000
250	267 - 310	267 - 310	**709 301 228**	**709 301 628**	**709 301 028**	**709 301 328**	44.200
300	315 - 356	315 - 356	**709 301 232**	**709 301 632**	**709 301 032**	**709 301 332**	57.400
350	352 - 393	352 - 393	**709 301 236**	**709 301 636**	**709 301 036**	**709 301 336**	74.000
400	392 - 433	392 - 433	**709 301 240**	**709 301 640**	**709 301 040**	**709 301 340**	72.400
425	432 - 464	432 - 464	**709 301 242**	**709 301 642**	**709 301 042**	**709 301 342**	96.800
450	450 - 482	450 - 482	**709 301 272**	**709 301 672**	**709 301 072**	**709 301 372**	100.200
475	481 - 513	481 - 513	**709 301 273**	**709 301 673**	**709 301 073**	**709 301 373**	105.400
500	500 - 532	500 - 532	**709 301 274**	**709 301 674**	**709 301 074**	**709 301 374**	99.900
550	548 - 580	548 - 580	**709 301 276**	**709 301 676**	**709 301 076**	**709 301 376**	121.800
600	605 - 637	605 - 637	**709 301 278**	**709 301 678**	**709 301 078**	**709 301 378**	146.000

DN (mm)	a (mm)	b (mm)	ID min. (mm)	e (mm)	PN Water (bar)	MOP Gas (bar)
50	206 - 250	170	84	3xM12	25	8
65	215 - 261	191	84	3xM12	25	8
80	218 - 262	210	84	3xM12	25	8
100	228 - 280	241	90	3xM16	25	8
125	240 - 286	270	90	4xM16	25	8
150	278 - 352	312	110	4xM16	25	8
200	303 - 377	371	110	6xM16	25	8
225	350 - 426	415	125	6xM20	25	8
250	377 - 462	445	130	6xM20	25	8
300	384 - 460	495	130	8xM20	25	8
350	380 - 470	534	130	8xM20	25	8
400	380 - 470	574	135	10xM20	25	8
425	460 - 535	623	160	10xM20	16	8
450	460 - 535	641	160	10xM20	16	8

table continued on the next page

DN (mm)	a (mm)	b (mm)	ID min. (mm)	e (mm)	PN Water (bar)	MOP Gas (bar)
475	460 - 535	672	160	10xM20	16	8
500	460 - 535	691	160	10xM20	16	8
550	460 - 535	739	160	12xM20	16	8
600	480 - 555	796	170	14xM20	16	8

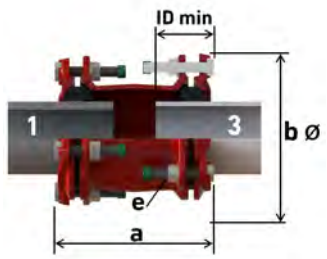

MULTI/JOINT® 3007 Plus Wide Range
Coupling, restraint, Uni/Fiksers

Model:

- Suitable for all kinds of pipe material
- Suitable for water and gas
- Ductile cast iron GGG45 body and clamping ring(s), acc. to EN-GJS-450-10
- RESICOAT® epoxy powder coating, according to GSK standards and EN 14901
- NBR or EPDM gasket, NBR acc. to EN 682 (-5°C up to +50°C), EPDM acc. to EN 681-1 (0°C up to +50°C)
- Angular deflection of max. 8° per socket at installation (based on the middle of the range)
- Stainless steel A4 quality (AISI 316) Uni/Fiksers
- Stainless steel A2 quality (AISI 304) or A4 quality (AISI 316) bolts, nuts and washers
- Hygiene protection included DN50 - DN825

Installation instruction:

- Read the user manual
- For restraint versions, on plastic pipes, the use of an insert stiffener (see accessories) is mandatory, check our technical information
- Please note, when using a MULTI/JOINT® DN625 till DN800 on plastic pipes, the use of the insert stiffener MJ DN625 - DN800 (see accessories) is mandatory
- * DN350 & DN400 for plastic pipe materials = PN 10 bar water / MOP 5 bar gas

Note:

ID min. = minimum insertion depth
DN625 - DN825 sales release from Q1/2021 (for water applications)

DN (mm)	Range 1 (mm)	Range 3 (mm)	NBR / A2 Code	EPDM / A2 Code	NBR / A4 Code	EPDM / A4 Code	Weight (kg)
50	46 - 71	46 - 71	**709 305 210**	**709 305 610**	**709 305 010**	**709 305 310**	4.900
65	63 - 90	63 - 90	**709 305 212**	**709 305 612**	**709 305 012**	**709 305 312**	5.800
80	84 - 105	84 - 105	**709 305 214**	**709 305 614**	**709 305 014**	**709 305 314**	7.500
100	104 - 132	104 - 132	**709 305 216**	**709 305 616**	**709 305 016**	**709 305 316**	9.200
125	132 - 155	132 - 155	**709 305 218**	**709 305 618**	**709 305 018**	**709 305 318**	12.100
150	154 - 192	154 - 192	**709 305 220**	**709 305 620**	**709 305 020**	**709 305 320**	17.400
200	192 - 232	192 - 232	**709 305 224**	**709 305 624**	**709 305 024**	**709 305 324**	29.800
225	230 - 268	230 - 268	**709 305 226**	**709 305 626**	**709 305 026**	**709 305 326**	40.000
250	267 - 310	267 - 310	**709 305 228**	**709 305 628**	**709 305 028**	**709 305 328**	44.200
300	315 - 356	315 - 356	**709 305 232**	**709 305 632**	**709 305 032**	**709 305 332**	57.400
350	352 - 393	352 - 393	**709 305 236**	**709 305 636**	**709 305 036**	**709 305 336**	74.000
400	392 - 433	392 - 433	**709 305 240**	**709 305 640**	**709 305 040**	**709 305 340**	72.400
425	432 - 464	432 - 464	**709 305 242**	**709 305 642**	**709 305 042**	**709 305 342**	96.800
450	450 - 482	450 - 482	**709 305 272**	**709 305 672**	**709 305 072**	**709 305 372**	100.200
475	481 - 513	481 - 513	**709 305 273**	**709 305 673**	**709 305 073**	**709 305 373**	105.400
500	500 - 532	500 - 532	**709 305 274**	**709 305 674**	**709 305 074**	**709 305 374**	99.900
550	548 - 580	548 - 580	**709 305 276**	**709 305 676**	**709 305 076**	**709 305 376**	121.800
600	605 - 637	605 - 637	**709 305 278**	**709 305 678**	**709 305 078**	**709 305 378**	146.000
625	630 - 662	630 - 662			**709 305 280**	**709 305 680**	221.000
675	665 - 697	655 - 697			**709 305 281**	**709 305 681**	231.000
700	709 - 741	709 - 741			**709 305 282**	**709 305 682**	246.000
800	799 - 831	799 - 831			**709 305 283**	**709 305 683**	276.000
825	837 - 869	837 - 869			**709 305 284**	**709 305 684**	287.000

DN (mm)	a (mm)	b (mm)	ID min. (mm)	e (mm)	PN Water (bar)	MOP Gas (bar)
50	206 - 250	170	84	3xM12	16	8
65	215 - 261	191	84	3xM12	16	8
80	218 - 262	210	84	3xM12	16	8
100	228 - 280	241	90	3xM16	16	8

table continued on the next page

DN (mm)	a (mm)	b (mm)	ID min. (mm)	e (mm)	PN Water (bar)	MOP Gas (bar)
125	240 - 286	270	90	4xM16	16	8
150	278 - 352	312	110	4xM16	16	8
200	303 - 377	371	110	6xM16	16	8
225	350 - 426	415	125	6xM20	16	8
250	377 - 462	445	130	6xM20	16	8
300	384 - 460	495	130	8xM20	16	8
350	380 - 470	534	130	8xM20	16*	8*
400	380 - 470	574	135	10xM20	16*	8*
425	460 - 535	623	160	10xM20	10	5
450	460 - 535	641	160	10xM20	10	5
475	460 - 535	672	160	10xM20	10	5
500	460 - 535	691	160	10xM20	10	5
550	460 - 535	739	160	12xM20	10	5
600	480 - 555	796	170	14xM20	10	5
625	657 - 717	860	210	14xM20	10	-
675	660 - 720	895	210	14xM20	10	-
700	667 - 727	940	210	16xM20	10	-
800	667 - 727	1030	210	20xM20	10	-
825	667 - 727	1070	210	20xM20	10	-

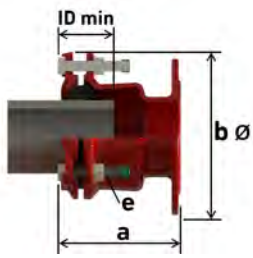

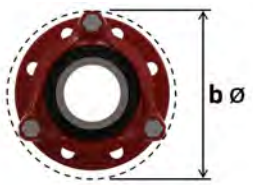

MULTI/JOINT® 3050 Plus Wide Range
Flange adaptor, non restraint

Model:

- Suitable for all kinds of pipe material
- Suitable for water and gas
- Ductile cast iron GGG45 body and clamping ring(s), acc. to EN-GJS-450-10
- RESICOAT® epoxy powder coating, according to GSK standards and EN 14901
- NBR or EPDM gasket, NBR acc. to EN 682 (-5°C up to +50°C), EPDM acc. to EN 681-1 (0°C up to +50°C)
- Angular deflection of max. 8° per socket at installation (based on the middle of the range)
- Stainless steel A2 quality (AISI 304) or A4 quality (AISI 316) bolts, nuts and washers
- Hygiene protection included DN50 - DN825

Installation instruction:

- Read the user manual
- For all plastic pipes, the use of an insert stiffener (see accessories) is recommended and in some cases mandatory. Check our technical information.

Note:

ID min. = minimum insertion depth

DN (mm)	Range 1 (mm)	Flange 3 (mm)	Drilling pattern
50	46 - 71	50	PN16
65	63 - 90	60/65	PN16
80	84 - 105	80	PN16
100	104 - 132	100	PN16
125	132 - 155	125	PN16
150	154 - 192	150	PN16
200	192 - 232	200	PN10
200	192 - 232	200	PN16
250	267 - 310	250	PN10
250	267 - 310	250	PN16
300	315 - 356	300	PN10
300	315 - 356	300	PN16
350	352 - 393	350	PN10
350	352 - 393	350	PN16
400	392 - 433	400	PN10

table continued on the next page

DN (mm)	Range 1 (mm)	Flange 3 (mm)	Drilling pattern
400	392 - 433	400	PN16
450	450 - 482	450	PN10/PN16
500	500 - 532	500	PN10/PN16
600	605 - 637	600	PN10/PN16

DN (mm)	NBR / A2 Code	EPDM / A2 Code	NBR / A4 Code	EPDM / A4 Code	Weight (kg)
50	**709 351 210**	**709 351 610**	**709 351 010**	**709 351 310**	4.800
65	**709 351 212**	**709 351 612**	**709 351 012**	**709 351 312**	5.400
80	**709 351 214**	**709 351 614**	**709 351 014**	**709 351 314**	6.700
100	**709 351 216**	**709 351 616**	**709 351 016**	**709 351 316**	8.000
125	**709 351 218**	**709 351 618**	**709 351 018**	**709 351 318**	10.800
150	**709 351 220**	**709 351 620**	**709 351 020**	**709 351 320**	14.800
200	**709 351 224**	**709 351 624**	**709 351 024**	**709 351 324**	23.600
200	**709 351 225**	**709 351 625**	**709 351 025**	**709 351 325**	23.400
250	**709 351 228**	**709 351 628**	**709 351 028**	**709 351 328**	33.200
250	**709 351 229**	**709 351 629**	**709 351 029**	**709 351 329**	35.200
300	**709 351 232**	**709 351 632**	**709 351 032**	**709 351 332**	48.800
300	**709 351 233**	**709 351 633**	**709 351 033**	**709 351 333**	48.400
350	**709 351 236**	**709 351 636**	**709 351 036**	**709 351 336**	56.600
350	**709 351 237**	**709 351 637**	**709 351 037**	**709 351 337**	55.200
400	**709 351 238**	**709 351 638**	**709 351 038**	**709 351 338**	70.800
400	**709 351 239**	**709 351 639**	**709 351 039**	**709 351 339**	68.800
450	**709 351 272**	**709 351 672**	**709 351 072**	**709 351 372**	70.000
500	**709 351 274**	**709 351 674**	**709 351 074**	**709 351 374**	91.000
600	**709 351 278**	**709 351 678**	**709 351 078**	**709 351 378**	126.200

DN (mm)	a (mm)	b (mm)	ID min. (mm)	e (mm)	PN Water (bar)	MOP Gas (bar)	No. of bolt holes flange
50	165 - 187	170	84	3xM12	25	8	4
65	170 - 193	191	84	3xM12	25	8	4
80	170 - 192	210	84	3xM12	25	8	8
100	173 - 199	241	90	3xM16	25	8	8
125	192 - 215	270	90	4xM16	25	8	8
150	211 - 248	312	110	4xM16	25	8	8
200	221 - 258	371	110	6xM16	25	8	8
200	221 - 258	371	110	6xM16	25	8	12
250	264 - 307	445	130	6xM20	25	8	12
250	264 - 307	445	130	6xM20	25	8	12
300	293 - 331	495	130	8xM20	25	8	12
300	293 - 331	495	130	8xM20	25	8	12
350	291 - 336	534	130	8xM20	25	8	16
350	291 - 336	534	130	8xM20	25	8	16
400	297 - 342	580	135	10xM20	25	8	16
400	297 - 342	580	135	10xM20	25	8	16
450	330 - 367	641	160	10xM20	16	8	20
500	332 - 369	715	160	10xM20	16	8	20
600	339 - 377	840	170	14xM20	16	8	20

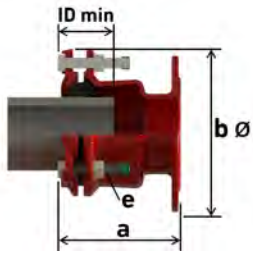

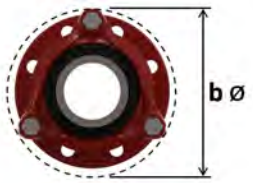

MULTI/JOINT® 3057 Plus Wide Range
Flange adaptor, restraint, Uni/Fiksers

Model:

- Suitable for all kinds of pipe material
- Suitable for water and gas
- Ductile cast iron GGG45 body and clamping ring(s), acc. to EN-GJS-450-10
- RESICOAT® epoxy powder coating, according to GSK standards and EN 14901
- NBR or EPDM gasket, NBR acc. to EN 682 (-5°C up to +50°C), EPDM acc. to EN 681-1 (0°C up to +50°C)
- Angular deflection of max. 8° per socket at installation (based on the middle of the range)
- Stainless steel A4 quality (AISI 316) Uni/Fiksers
- Stainless steel A2 quality (AISI 304) or A4 quality (AISI 316) bolts, nuts and washers
- Hygiene protection included DN50 - DN825

Installation instruction:

- Read the user manual
- For restraint versions, on plastic pipes, the use of an insert stiffener (see accessories) is mandatory, check our technical information
- Please note, when using a MULTI/JOINT® DN625 till DN800 on plastic pipes, the use of the insert stiffener MJ DN625 - DN800 (see accessories) is mandatory
- * DN350 & DN400 for plastic pipe materials = PN 10 bar water / MOP 5 bar gas

Note:

ID min. = minimum insertion depth

DN625 - DN825 sales release from Q1/2021 (for water applications)

DN (mm)	Range 1 (mm)	Flange 3 (mm)	Drilling pattern
50	46 - 71	50	PN16
65	63 - 90	60/65	PN16
80	84 - 105	80	PN16
100	104 - 132	100	PN16
125	132 - 155	125	PN16
150	154 - 192	150	PN16
200	192 - 232	200	PN10
200	192 - 232	200	PN16
250	267 - 310	250	PN10
250	267 - 310	250	PN16
300	315 - 356	300	PN10
300	315 - 356	300	PN16
350	352 - 393	350	PN10
350	352 - 393	350	PN16
400	392 - 433	400	PN10
400	392 - 433	400	PN16
450	450 - 482	450	PN10/PN16
500	500 - 532	500	PN10/PN16
600	605 - 637	600	PN10/PN16
700	709 - 741	700	PN10/PN16
800	799 - 831	800	PN10/PN16

DN (mm)	NBR / A2 Code	EPDM / A2 Code	NBR / A4 Code	EPDM / A4 Code	Weight (kg)
50	**709 355 210**	**709 355 610**	**709 355 010**	**709 355 310**	4.800
65	**709 355 212**	**709 355 612**	**709 355 012**	**709 355 312**	5.400
80	**709 355 214**	**709 355 614**	**709 355 014**	**709 355 314**	6.700
100	**709 355 216**	**709 355 616**	**709 355 016**	**709 355 316**	8.000
125	**709 355 218**	**709 355 618**	**709 355 018**	**709 355 318**	10.800
150	**709 355 220**	**709 355 620**	**709 355 020**	**709 355 320**	14.800
200	**709 355 224**	**709 355 624**	**709 355 024**	**709 355 324**	23.600
200	**709 355 225**	**709 355 625**	**709 355 025**	**709 355 325**	23.400
250	**709 355 228**	**709 355 628**	**709 355 028**	**709 355 328**	33.200
250	**709 355 229**	**709 355 629**	**709 355 029**	**709 355 329**	35.200
300	**709 355 232**	**709 355 632**	**709 355 032**	**709 355 332**	48.800
300	**709 355 233**	**709 355 633**	**709 355 033**	**709 355 333**	48.400
350	**709 355 236**	**709 355 636**	**709 355 036**	**709 355 336**	56.600
350	**709 355 237**	**709 355 637**	**709 355 037**	**709 355 337**	55.200
400	**709 355 238**	**709 355 638**	**709 355 038**	**709 355 338**	70.800

table continued on the next page

DN (mm)	NBR / A2 Code	EPDM / A2 Code	NBR / A4 Code	EPDM / A4 Code	Weight (kg)
400	**709 355 239**	**709 355 639**	**709 355 039**	**709 355 339**	68.800
450	**709 355 272**	**709 355 672**	**709 355 072**	**709 355 372**	70.000
500	**709 355 274**	**709 355 674**	**709 355 074**	**709 355 374**	91.000
600	**709 355 278**	**709 355 678**	**709 355 078**	**709 355 378**	126.200
700			**709 355 282**	**709 355 682**	181.000
800			**709 355 283**	**709 355 683**	209.000

DN (mm)	a (mm)	b (mm)	ID min. (mm)	e (mm)	PN Water (bar)	MOP Gas (bar)	No. of bolt holes flange
50	165 - 187	170	84	3xM12	16	8	4
65	170 - 193	191	84	3xM12	16	8	4
80	170 - 192	210	84	3xM12	16	8	8
100	173 - 199	241	90	3xM16	16	8	8
125	192 - 215	270	90	4xM16	16	8	8
150	211 - 248	312	110	4xM16	16	8	8
200	221 - 258	371	110	6xM16	16	8	8
200	221 - 258	371	110	6xM16	16	8	12
250	264 - 307	445	130	6xM20	16	8	12
250	264 - 307	445	130	6xM20	16	8	12
300	293 - 331	495	130	8xM20	16	8	12
300	293 - 331	495	130	8xM20	16	8	12
350	291 - 336	534	130	8xM20	16*	8*	16
350	291 - 336	534	130	8xM20	16*	8*	16
400	297 - 342	580	135	10xM20	16*	8*	16
400	297 - 342	580	135	10xM20	16*	8*	16
450	330 - 367	641	160	10xM20	10	5	20
500	332 - 369	715	160	10xM20	10	5	20
600	339 - 377	840	170	14xM20	10	5	20
700	434 - 464	940	210	16xM20	10	-	24
800	431 - 461	1030	210	20xM20	10	-	24

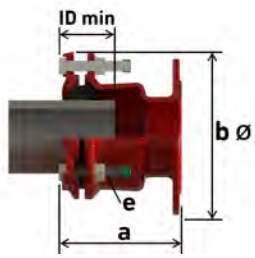

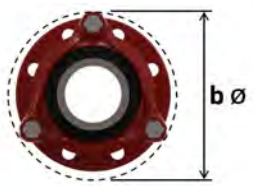

MULTI/JOINT® 3057 / 3157 Plus Wide Range Flange adaptor acc. to AWWA C110, restraint, Uni/Fiksers

Model:

- Suitable for all kinds of pipe material
- Suitable for water and gas
- Ductile cast iron GGG45 body and clamping ring(s), acc. to EN-GJS-450-10
- RESICOAT® epoxy powder coating, according to GSK standards and EN 14901
- NBR or EPDM gasket, NBR acc. to EN 682 (-5°C up to +50°C), EPDM acc. to EN 681-1 (0°C up to +50°C)
- Angular deflection of max. 8° per socket at installation (based on the middle of the range)
- Stainless steel A4 quality (AISI 316) Uni/Fiksers
- Stainless steel A2 quality (AISI 304) or A4 quality (AISI 316) bolts, nuts and washers
- Hygiene protection included DN50 - DN825

Installation instruction:

- Read the user manual
- For restraint versions, on plastic pipes, the use of an insert stiffener (see accessories) is mandatory, check our technical information

Note:

ID min. = minimum insertion depth

	DN (mm)	DN (inch)	Range 1 (mm)	Range 1 (inch)	Flange 3 (mm)	Flange 3 (inch)
NEW	50	2	46 - 71	1.811 - 2.795	50	2
NEW	65	2 ½	63 - 90	2.480 - 3.543	65	2 ½
	80	3	84 - 105	3.307 - 4.133	80	3
	100	4	104 - 132	4.094 - 5.196	100	4
	150	6	154 - 192	6.062 - 7.559	150	6
	200	8	192 - 232	7.559 - 9.133	200	8
	250	10	267 - 310	10.500 - 12.204	250	10

table continued on the next page

	DN (mm)	DN (inch)	Range 1 (mm)	Range 1 (inch)	Flange 3 (mm)	Flange 3 (inch)
	300	12	315 - 356	12.401 - 14.015	300	12
	400	16	392 - 433	15.433 - 17.047	400	16
reduced	425	17	432 - 464	17.000 - 18.267	400	16
reduced	475	19	481 - 513	18.937 - 20.196	400	16

	NBR / A2 Code	EPDM / A2 Code	NBR / A4 Code	EPDM / A4 Code	Weight (kg)
NEW	**709 355 211**	**709 355 611**	**709 355 011**	**709 355 311**	4.800
NEW	**709 355 213**	**709 355 613**	**709 355 013**	**709 355 313**	5.400
	709 355 240	**709 355 640**	**709 355 040**	**709 355 340**	6.700
	709 355 242	**709 355 642**	**709 355 042**	**709 355 342**	8.000
	709 355 244	**709 355 644**	**709 355 044**	**709 355 344**	14.800
	709 355 246	**709 355 646**	**709 355 046**	**709 355 346**	23.400
	709 355 248	**709 355 648**	**709 355 048**	**709 355 348**	33.200
	709 355 250	**709 355 650**	**709 355 050**	**709 355 350**	48.800
	709 455 294	**709 455 694**	**709 455 094**	**709 455 394**	70.800
reduced	**709 455 289**	**709 455 689**	**709 455 089**	**709 455 389**	73.800
reduced	**709 455 291**	**709 455 691**	**709 455 091**	**709 455 391**	86.600

	a (inch)	b (inch)	ID min. (inch)	e (inch)	PSI Water (psi)	No. of bolt holes flange
NEW	6.496 - 7.362	6.457	3.307	3xM12	232	4
NEW	6.693 - 7.598	7.323	3.307	3xM12	232	4
	6.693 - 7.559	8.031	3.307	3xM12	232	4
	6.811 - 7.835	9.291	3.543	3xM16	232	8
	8.307 - 9.764	11.969	4.331	4xM16	232	8
	8.700 - 10.157	13.937	4.331	6xM16	232	8
	10.394 - 12.087	17.008	5.118	6xM20	232	12
	11.535 - 13.032	19.488	5.118	8xM20	232	12
	11.693 - 13.465	20.630	5.315	10xM20	150	16
reduced	12.992 - 14.449	24.528	6.229	10xM20	150	16
reduced	14.173 - 15.630	26.457	6.229	10xM20	150	16

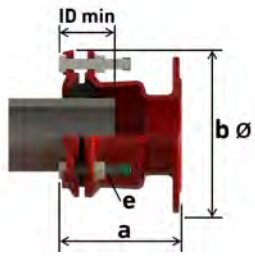

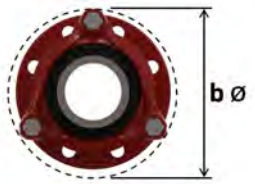

MULTI/JOINT® 3057 / 3157 Plus Wide Range (reduced) Flange adaptor acc. to Table D, restraint, Uni/Fiksers

Model:

- Suitable for all kinds of pipe material
- Suitable for water and gas
- Ductile cast iron GGG45 body and clamping ring(s), acc. to EN-GJS-450-10
- RESICOAT® epoxy powder coating, according to GSK standards and EN 14901
- NBR or EPDM gasket, NBR acc. to EN 682 (-5°C up to +50°C), EPDM acc. to EN 681-1 (0°C up to +50°C)
- Angular deflection of max. 8° per socket at installation (based on the middle of the range)
- Stainless steel A4 quality (AISI 316) Uni/Fiksers
- Stainless steel A2 quality (AISI 304) or A4 quality (AISI 316) bolts, nuts and washers
- Hygiene protection included DN50 - DN825

Installation instruction:

- Read the user manual
- For restraint versions, on plastic pipes, the use of an insert stiffener (see accessories) is mandatory, check our technical information

Note:

ID min. = minimum insertion depth

	DN (mm)	Range 1 (mm)	Flange 3 (mm)	EPDM / A4 Code	Weight (kg)
	50	46 - 71	50	**709 355 510**	5.600
	65	63 - 90	65	**709 355 512**	6.500
	80	84 - 105	80	**709 355 514**	6.500
	100	104 - 132	100	**709 355 517**	8.600
	150	154 - 192	150	**709 355 521**	14.000
	200	192 - 232	200	**709 355 526**	21.700
	250	267 - 310	250	**709 355 529**	31.100
	300	315 - 356	300	**709 355 533**	10.500
reduced	125	132 - 155	100	**709 455 533**	11.800
reduced	125	132 - 155	150	**709 455 539**	13.200
reduced	225	230 - 268	200	**709 455 559**	29.700
reduced	225	230 - 268	250	**709 455 581**	29.700

	a (mm)	b (mm)	ID min. (mm)	e (mm)	PN Water (bar)	MOP Gas (bar)	No. of bolt holes flange
	165 - 187	170	84	3xM12	16	8	4
	170 - 193	191	84	3xM12	16	8	4
	170 - 192	210	84	3xM12	16	8	4
	173 - 199	241	90	3xM16	16	8	4
	211 - 248	312	110	4xM16	16	8	8
	221 - 258	371	110	6xM16	16	8	8
	264 - 307	445	130	6xM20	16	8	8
	293 - 331	495	130	8xM20	16	8	12
reduced	187 - 210	270	90	4xM16	16	8	4
reduced	187 - 210	285	90	4xM16	16	8	8
reduced	250 - 288	415	125	6xM20	16	8	8
reduced	216 - 254	415	125	6xM20	16	8	8

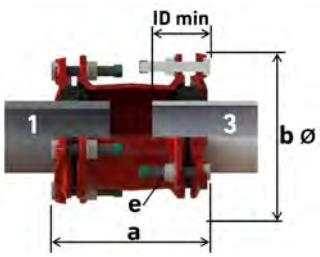

MULTI/JOINT® 3100 Plus Wide Range
Reduced Coupling, non restraint

Model:

- Suitable for all kinds of pipe material
- Suitable for water and gas
- Ductile cast iron GGG45 body and clamping ring(s), acc. to EN-GJS-450-10
- RESICOAT® epoxy powder coating, according to GSK standards and EN 14901
- NBR or EPDM gasket, NBR acc. to EN 682 (-5°C up to +50°C), EPDM acc. to EN 681-1 (0°C up to +50°C)
- Angular deflection of max. 8° per socket at installation (based on the middle of the range)
- Stainless steel A2 quality (AISI 304) or A4 quality (AISI 316) bolts, nuts and washers
- Hygiene protection included DN50 - DN825

Installation instruction:

- Read the user manual
- For all plastic pipes, the use of an insert stiffener (see accessories) is recommended and in some cases mandatory. Check our technical information.

Note:

ID min. = minimum insertion depth

	DN-DN (mm)	Range 1 (mm)	Range 3 (mm)
	50 - 65	46 - 71	63 - 90
	65 - 80	63 - 90	84 - 105
	80 - 100	84 - 105	104 - 132
	100 - 125	104 - 132	132 - 155
	100 - 150	104 - 132	154 - 192
	125 - 150	132 - 155	154 - 192
	150 - 200	154 - 192	192 - 232
	200 - 225	192 - 232	230 - 268
Coming soon	200 - 250	192 - 232	267 - 310
	225 - 250	230 - 268	267 - 310
	250 - 300	267 - 310	315 - 356
	300 - 350	315 - 356	352 - 393
	350 - 400	352 - 393	392 - 433
	300 - 400	315 - 356	392 - 433
	400 - 425	392 - 433	432 - 464
	400 - 450	392 - 433	450 - 482
	425 - 475	432 - 464	481 - 513
	450 - 500	450 - 482	500 - 532
	500 - 550	500 - 532	548 - 580
	550 - 600	548 - 580	605 - 637

	DN-DN (mm)	NBR / A2 Code	EPDM / A2 Code	NBR / A4 Code	EPDM / A4 Code	Weight (kg)
	50 - 65	**709 401 218**	**709 401 618**	**709 401 018**	**709 401 318**	5.500
	65 - 80	**709 401 220**	**709 401 620**	**709 401 020**	**709 401 320**	6.700
	80 - 100	**709 401 224**	**709 401 624**	**709 401 024**	**709 401 324**	8.000
	100 - 125	**709 401 232**	**709 401 632**	**709 401 032**	**709 401 332**	11.600
	100 - 150	**709 401 236**	**709 401 636**	**709 401 036**	**709 401 336**	15.200
	125 - 150	**709 401 238**	**709 401 638**	**709 401 038**	**709 401 338**	16.700
	150 - 200	**709 401 248**	**709 401 648**	**709 401 048**	**709 401 348**	24.800
	200 - 225	**709 401 278**	**709 401 678**	**709 401 078**	**709 401 378**	37.000
Coming soon	200 - 250	**709 401 281**	**709 401 681**	**709 401 081**	**709 401 381**	37.400
	225 - 250	**709 401 282**	**709 401 682**	**709 401 082**	**709 401 382**	44.200
	250 - 300	**709 401 286**	**709 401 686**	**709 401 086**	**709 401 386**	55.000
	300 - 350	**709 401 288**	**709 401 688**	**709 401 088**	**709 401 388**	67.400
	350 - 400	**709 401 290**	**709 401 690**	**709 401 090**	**709 401 390**	78.000
	300 - 400	**709 401 289**	**709 401 689**	**709 401 089**	**709 401 389**	69.260
	400 - 425	**709 401 293**	**709 401 693**	**709 401 093**	**709 401 393**	92.400
	400 - 450	**709 401 292**	**709 401 692**	**709 401 092**	**709 401 392**	92.000

table continued on the next page

	DN-DN (mm)	NBR / A2 Code	EPDM / A2 Code	NBR / A4 Code	EPDM / A4 Code	Weight (kg)
	425 - 475	**709 401 295**	**709 401 695**	**709 401 095**	**709 401 395**	99.700
	450 - 500	**709 401 294**	**709 401 694**	**709 401 094**	**709 401 394**	106.700
	500 - 550	**709 401 296**	**709 401 696**	**709 401 096**	**709 401 396**	112.900
	550 - 600	**709 401 297**	**709 401 697**	**709 401 097**	**709 401 397**	130.000

	DN-DN (mm)	a (mm)	b (mm)	ID min. side 1 (mm)	ID min. side 3 (mm)	e (mm)
	50 - 65	209 - 254	191	84	84	3xM12/3xM12
	65 - 80	223 - 267	210	84	84	3xM12/3xM12
	80 - 100	222 - 270	241	84	90	3xM12/3xM16
	100 - 125	228 - 277	270	90	90	3xM16/4xM16
	100 - 150	286 - 353	312	90	110	4xM16/4xM16
	125 - 150	286 - 346	312	90	110	4xM16/4xM16
	150 - 200	290 - 364	371	110	110	4xM16/6xM16
	200 - 225	349 - 420	415	110	125	6xM16/6xM20
Coming soon	200 - 250	364 - 443	445	110	130	6xM16/6xM20
	225 - 250	368 - 450	445	125	130	6xM20/6xM20
	250 - 300	405 - 486	495	130	130	6xM20/8xM20
	300 - 350	443 - 527	534	130	130	8xM20/8xM20
	350 - 400	472 - 561	574	130	135	8xM20/10xM20
	300 - 400	469 - 552	574	130	135	8xM20/10xM20
	400 - 425	437 - 520	623	135	160	10xM20/10xM20
	400 - 450	437 - 520	641	135	160	10xM20/10xM20
	425 - 475	483 - 558	672	160	160	10xM20/10xM20
	450 - 500	483 - 558	691	160	160	10xM20/10xM20
	500 - 550	478 - 553	739	160	160	10xM20/12xM20
	550 - 600	488 - 563	796	160	170	12xM20/14xM20

	DN-DN (mm)	PN Water (bar)	MOP Gas (bar)
	50 - 65	25	8
	65 - 80	25	8
	80 - 100	25	8
	100 - 125	25	8
	100 - 150	25	8
	125 - 150	25	8
	150 - 200	25	8
	200 - 225	25	8
Coming soon	200 - 250	25	8
	225 - 250	25	8
	250 - 300	25	8
	300 - 350	25	8
	350 - 400	25	8
	300 - 400	25	8
	400 - 425	16	8
	400 - 450	16	8
	425 - 475	16	8
	450 - 500	16	8
	500 - 550	16	8
	550 - 600	16	8

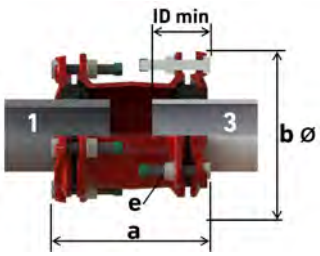

MULTI/JOINT® 3107 Plus Wide Range
Reduced Coupling, restraint, Uni/Fiksers

Model:

- Suitable for all kinds of pipe material
- Suitable for water and gas
- Ductile cast iron GGG45 body and clamping ring(s), acc. to EN-GJS-450-10
- RESICOAT® epoxy powder coating, according to GSK standards and EN 14901
- NBR or EPDM gasket, NBR acc. to EN 682 (-5°C up to +50°C), EPDM acc. to EN 681-1 (0°C up to +50°C)
- Angular deflection of max. 8° per socket at installation (based on the middle of the range)
- Stainless steel A4 quality (AISI 316) Uni/Fiksers
- Stainless steel A2 quality (AISI 304) or A4 quality (AISI 316) bolts, nuts and washers
- Hygiene protection included DN50 - DN825

Installation instruction:

- Read the user manual
- For restraint versions, on plastic pipes, the use of an insert stiffener (see accessories) is mandatory, check our technical information
- Please note, when using a MULTI/JOINT® DN625 till DN800 on plastic pipes, the use of the insert stiffener MJ DN625 - DN800 (see accessories) is mandatory
- * DN350 & DN400 for plastic pipe materials = PN 10 bar water / MOP 5 bar gas

Note:

ID min. = minimum insertion depth

DN625 - DN825 sales release from Q1/2021 (for water applications)

	DN-DN (mm)	Range 1 (mm)	Range 3 (mm)
	50 - 65	46 - 71	63 - 90
	65 - 80	63 - 90	84 - 105
	80 - 100	84 - 105	104 - 132
	100 - 125	104 - 132	132 - 155
	100 - 150	104 - 132	154 - 192
	125 - 150	132 - 155	154 - 192
	150 - 200	154 - 192	192 - 232
	200 - 225	192 - 232	230 - 268
Coming soon	200 - 250	192 - 232	267 - 310
	225 - 250	230 - 268	267 - 310
	250 - 300	267 - 310	315 - 356
	300 - 350	315 - 356	352 - 393
	300 - 400	315 - 356	392 - 433
	350 - 400	352 - 393	392 - 433
	400 - 425	392 - 433	432 - 464
	400 - 450	392 - 433	450 - 482
	425 - 475	432 - 464	481 - 513
	450 - 500	450 - 482	500 - 532
	500 - 550	500 - 532	548 - 580
	550 - 600	548 - 580	605 - 637
	600 - 625	605 - 637	630 - 662
	600 - 675	605 - 637	665 - 697
	600 - 700	605 - 637	709 - 741

	DN-DN (mm)	NBR / A2 Code	EPDM / A2 Code	NBR / A4 Code	EPDM / A4 Code	Weight (kg)
	50 - 65	**709 405 218**	**709 405 618**	**709 405 018**	**709 405 318**	5.500
	65 - 80	**709 405 220**	**709 405 620**	**709 405 020**	**709 405 320**	6.700
	80 - 100	**709 405 224**	**709 405 624**	**709 405 024**	**709 405 324**	8.000
	100 - 125	**709 405 232**	**709 405 632**	**709 405 032**	**709 405 332**	11.600
	100 - 150	**709 405 236**	**709 405 636**	**709 405 036**	**709 405 336**	15.200
	125 - 150	**709 405 238**	**709 405 638**	**709 405 038**	**709 405 338**	16.700
	150 - 200	**709 405 248**	**709 405 648**	**709 405 048**	**709 405 348**	24.800
	200 - 225	**709 405 278**	**709 405 678**	**709 405 078**	**709 405 378**	37.000
Coming soon	200 - 250	**709 405 281**	**709 405 681**	**709 405 081**	**709 405 381**	37.400
	225 - 250	**709 405 282**	**709 405 682**	**709 405 082**	**709 405 382**	44.200
	250 - 300	**709 405 286**	**709 405 686**	**709 405 086**	**709 405 386**	55.000
	300 - 350	**709 405 288**	**709 405 688**	**709 405 088**	**709 405 388**	67.400
	300 - 400	**709 405 289**	**709 405 689**	**709 405 089**	**709 405 389**	69.680

table continued on the next page

	DN-DN (mm)	NBR / A2 Code	EPDM / A2 Code	NBR / A4 Code	EPDM / A4 Code	Weight (kg)
	350 - 400	**709 405 290**	**709 405 690**	**709 405 090**	**709 405 390**	78.000
	400 - 425	**709 405 293**	**709 405 693**	**709 405 093**	**709 405 393**	92.400
	400 - 450	**709 405 292**	**709 405 692**	**709 405 092**	**709 405 392**	92.000
	425 - 475	**709 405 295**	**709 405 695**	**709 405 095**	**709 405 395**	100.300
	450 - 500	**709 405 294**	**709 405 694**	**709 405 094**	**709 405 394**	107.200
	500 - 550	**709 405 296**	**709 405 696**	**709 405 096**	**709 405 396**	113.500
	550 - 600	**709 405 297**	**709 405 697**	**709 405 097**	**709 405 397**	130.000
	600 - 625			**709 405 298**	**709 405 698**	182.000
	600 - 675			**709 405 299**	**709 405 699**	190.000
	600 - 700			**709 405 300**	**709 405 700**	203.000

	DN-DN (mm)	a (mm)	b (mm)	ID min. side 1 (mm)	ID min. side 3 (mm)	e (mm)
	50 - 65	209 - 254	191	84	84	3xM12/3xM12
	65 - 80	223 - 267	210	84	84	3xM12/3xM12
	80 - 100	222 - 270	241	84	90	3xM12/3xM16
	100 - 125	228 - 277	270	90	90	3xM16/4xM16
	100 - 150	286 - 353	312	90	110	3xM16/4xM16
	125 - 150	286 - 346	312	90	110	4xM16/4xM16
	150 - 200	290 - 364	371	110	110	4xM16/6xM16
	200 - 225	349 - 420	415	110	125	6xM16/6xM20
Coming soon	200 - 250	364 - 443	445	110	130	6xM16/6xM20
	225 - 250	368 - 450	445	125	130	6xM20/6xM20
	250 - 300	405 - 486	495	130	130	6xM20/8xM20
	300 - 350	443 - 527	534	130	130	8xM20/8xM20
	300 - 400	469 - 552	574	130	135	8xM20/10xM20
	350 - 400	472 - 561	574	130	135	8xM20/10xM20
	400 - 425	437 - 520	623	135	160	10xM20/10xM20
	400 - 450	437 - 520	641	135	160	10xM20/10xM20
	425 - 475	483 - 558	672	160	160	10xM20/10xM20
	450 - 500	483 - 558	691	160	160	10xM20/10xM20
	500 - 550	478 - 553	739	160	160	10xM20/12xM20
	550 - 600	488 - 563	796	160	170	12xM20/14xM20
	600 - 625	576 - 644	860	170	210	14xM20/14xM20
	600 - 675	582 - 650	895	170	210	14xM20/14xM20
	600 - 700	594 - 662	940	170	210	14xM20/16xM20

	DN-DN (mm)	PN Water (bar)	MOP Gas (bar)
	50 - 65	16	8
	65 - 80	16	8
	80 - 100	16	8
	100 - 125	16	8
	100 - 150	16	8
	125 - 150	16	8
	150 - 200	16	8
	200 - 225	16	8
Coming soon	200 - 250	16	8
	225 - 250	16	8
	250 - 300	16	8
	300 - 350	16*	8*
	300 - 400	16*	8*
	350 - 400	16*	8*
	400 - 425	10	5
	400 - 450	10	5
	425 - 475	10	5
	450 - 500	10	5
	500 - 550	10	5

table continued on the next page

DN-DN (mm)	PN Water (bar)	MOP Gas (bar)
550 - 600	10	5
600 - 625	10	-
600 - 675	10	-
600 - 700	10	-

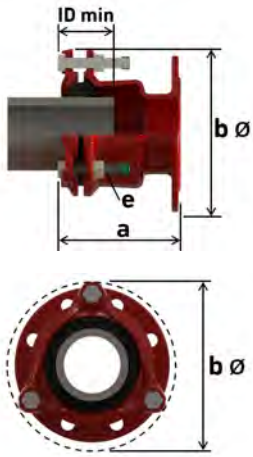

MULTI/JOINT® 3150 Plus Wide Range
Reduced flange adaptor, non restraint

Model:

- Suitable for all kinds of pipe material
- Suitable for water and gas
- Ductile cast iron GGG45 body and clamping ring(s), acc. to EN-GJS-450-10
- RESICOAT® epoxy powder coating, according to GSK standards and EN 14901
- NBR or EPDM gasket, NBR acc. to EN 682 (-5°C up to +50°C), EPDM acc. to EN 681-1 (0°C up to +50°C)
- Angular deflection of max. 8° per socket at installation (based on the middle of the range)
- Stainless steel A2 quality (AISI 304) or A4 quality (AISI 316) bolts, nuts and washers
- Hygiene protection included DN50 - DN825

Installation instruction:

- Read the user manual
- For all plastic pipes, the use of an insert stiffener (see accessories) is recommended and in some cases mandatory. Check our technical information.

Note:

ID min. = minimum insertion depth

DN-DN (mm)	Range 1 (mm)	Flange 3 (mm)	Drilling pattern
50 - 40	46 - 71	40	PN16
65 - 80	63 - 90	80	PN16
100 - 80	104 - 132	80	PN16
125 - 100	132 - 155	100	PN16
125 - 150	132 - 155	150	PN16
150 - 100	154 - 192	100	PN16
200 - 150	192 - 232	150	PN16
225 - 200	230 - 268	200	PN10
225 - 200	230 - 268	200	PN16
225 - 250	230 - 268	250	PN10
225 - 250	230 - 268	250	PN16
300 - 250	315 - 356	250	PN10
300 - 250	315 - 356	250	PN16
350 - 300	352 - 393	300	PN10
350 - 300	352 - 393	300	PN16
425 - 400	432 - 464	400	PN10/PN16
450 - 400	450 - 482	400	PN10/PN16
475 - 400	481 - 513	400	PN10/PN16
550 - 500	548 - 580	500	PN10/PN16

DN-DN (mm)	NBR / A2 Code	EPDM / A2 Code	NBR / A4 Code	EPDM / A4 Code	Weight (kg)
50 - 40	**709 451 208**	**709 451 608**	**709 451 008**	**709 451 308**	4.400
65 - 80	**709 451 218**	**709 451 618**	**709 451 018**	**709 451 318**	6.700
100 - 80	**709 451 224**	**709 451 624**	**709 451 024**	**709 451 324**	7.900
125 - 100	**709 451 232**	**709 451 632**	**709 451 032**	**709 451 332**	9.800
125 - 150	**709 451 238**	**709 451 638**	**709 451 038**	**709 451 338**	11.400
150 - 100	**709 451 236**	**709 451 636**	**709 451 036**	**709 451 336**	13.700
200 - 150	**709 451 239**	**709 451 639**	**709 451 039**	**709 451 339**	21.000
225 - 200	**709 451 278**	**709 451 678**	**709 451 078**	**709 451 378**	30.200
225 - 200	**709 451 279**	**709 451 679**	**709 451 079**	**709 451 379**	29.000
225 - 250	**709 451 280**	**709 451 680**	**709 451 080**	**709 451 380**	29.200
225 - 250	**709 451 281**	**709 451 681**	**709 451 081**	**709 451 381**	28.800
300 - 250	**709 451 286**	**709 451 686**	**709 451 086**	**709 451 386**	13.300

table continued on the next page

DN-DN (mm)	NBR / A2 Code	EPDM / A2 Code	NBR / A4 Code	EPDM / A4 Code	Weight (kg)
300 - 250	**709 451 287**	**709 451 687**	**709 451 087**	**709 451 387**	46.600
350 - 300	**709 451 284**	**709 451 684**	**709 451 084**	**709 451 384**	48.100
350 - 300	**709 451 285**	**709 451 685**	**709 451 085**	**709 451 385**	51.200
425 - 400	**709 451 288**	**709 451 688**	**709 451 088**	**709 451 388**	73.800
450 - 400	**709 451 292**	**709 451 692**	**709 451 092**	**709 451 392**	77.600
475 - 400	**709 451 290**	**709 451 690**	**709 451 090**	**709 451 390**	86.600
550 - 500	**709 351 276**	**709 351 676**	**709 351 076**	**709 351 376**	96.500

DN-DN (mm)	a (mm)	b (mm)	ID min. (mm)	e (mm)	PN Water (bar)	MOP Gas (bar)	No. of bolt holes flange
50 - 40	176 - 198	170	84	3xM12	25	8	4
65 - 80	170 - 193	200	84	3xM12	25	8	8
100 - 80	182 - 208	241	90	3xM16	25	8	8
125 - 100	187 - 210	270	90	4xM16	25	8	8
125 - 150	187 - 210	285	90	4xM16	25	8	8
150 - 100	236 - 273	312	110	4xM16	25	8	8
200 - 150	246 - 283	371	110	6xM16	25	8	8
225 - 200	250 - 288	415	125	6xM20	25	8	8
225 - 200	250 - 288	415	125	6xM20	25	8	12
225 - 250	216 - 254	415	125	6xM20	25	8	12
225 - 250	216 - 254	415	125	6xM20	25	8	12
300 - 250	330 - 368	495	130	8xM20	25	8	12
300 - 250	330 - 368	495	130	8xM20	25	8	12
350 - 300	302 - 347	580	130	8xM20	25	8	12
350 - 300	302 - 347	580	130	8xM20	25	8	12
425 - 400	330 - 367	623	160	10xM20	16	8	16
450 - 400	330 - 367	641	160	10xM20	16	8	16
475 - 400	360 - 397	672	160	10xM20	16	8	16
550 - 500	330 - 367	739	160	12xM20	16	8	20

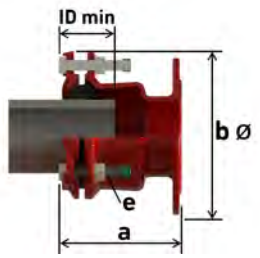

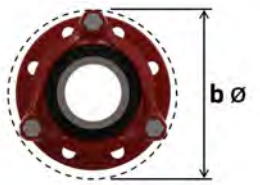

MULTI/JOINT® 3157 Plus Wide Range Reduced flange adaptor, restraint, Uni/Fiksers

Model:

- Suitable for all kinds of pipe material
- Suitable for water and gas
- Ductile cast iron GGG45 body and clamping ring(s), acc. to EN-GJS-450-10
- RESICOAT® epoxy powder coating, according to GSK standards and EN 14901
- NBR or EPDM gasket, NBR acc. to EN 682 (-5°C up to +50°C), EPDM acc. to EN 681-1 (0°C up to +50°C)
- Angular deflection of max. 8° per socket at installation (based on the middle of the range)
- Stainless steel A4 quality (AISI 316) Uni/Fiksers
- Stainless steel A2 quality (AISI 304) or A4 quality (AISI 316) bolts, nuts and washers
- Hygiene protection included DN50 - DN825

Installation instruction:

- Read the user manual
- For restraint versions, on plastic pipes, the use of an insert stiffener (see accessories) is mandatory, check our technical information
- Please note, when using a MULTI/JOINT® DN625 till DN800 on plastic pipes, the use of the insert stiffener MJ DN625 - DN800 (see accessories) is mandatory
- * DN350 & DN400 for plastic pipe materials = PN 10 bar water / MOP 5 bar gas

Note:

ID min. = minimum insertion depth
DN625 - DN825 sales release from Q1/2021 (for water applications)

DN-DN (mm)	Range 1 (mm)	Flange 3 (mm)	Drilling pattern
50 - 40	46 - 71	40	PN16
65 - 80	63 - 90	80	PN16
100 - 80	104 - 132	80	PN16

table continued on the next page

DN-DN (mm)	Range 1 (mm)	Flange 3 (mm)	Drilling pattern
125 - 100	132 - 155	100	PN16
125 - 150	132 - 155	150	PN16
150 - 100	154 - 192	100	PN16
200 - 150	192 - 232	150	PN16
225 - 200	230 - 268	200	PN10
225 - 200	230 - 268	200	PN16
225 - 250	230 - 268	250	PN10
225 - 250	230 - 268	250	PN16
300 - 250	315 - 356	250	PN10
300 - 250	315 - 356	250	PN16
350 - 300	352 - 393	300	PN10
350 - 300	352 - 393	300	PN16
425 - 400	432 - 464	400	PN10/PN16
450 - 400	450 - 482	400	PN10/PN16
475 - 400	481 - 513	400	PN10/PN16
550 - 500	548 - 580	500	PN10/PN16
625 - 600	630 - 662	600	PN10/PN16
675 - 600	665 - 697	600	PN10/PN16
825 - 800	837 - 869	800	PN10/PN16

DN-DN (mm)	NBR / A2 Code	EPDM / A2 Code	NBR / A4 Code	EPDM / A4 Code	Weight (kg)
50 - 40	**709 455 208**	**709 455 608**	**709 455 008**	**709 455 308**	4.400
65 - 80	**709 455 218**	**709 455 618**	**709 455 018**	**709 455 318**	6.700
100 - 80	**709 455 224**	**709 455 624**	**709 455 024**	**709 455 324**	7.900
125 - 100	**709 455 232**	**709 455 632**	**709 455 032**	**709 455 332**	9.800
125 - 150	**709 455 238**	**709 455 638**	**709 455 038**	**709 455 338**	11.400
150 - 100	**709 455 236**	**709 455 636**	**709 455 036**	**709 455 336**	13.700
200 - 150	**709 455 239**	**709 455 639**	**709 455 039**	**709 455 339**	21.000
225 - 200	**709 455 278**	**709 455 678**	**709 455 078**	**709 455 378**	30.200
225 - 200	**709 455 279**	**709 455 679**	**709 455 079**	**709 455 379**	29.000
225 - 250	**709 455 280**	**709 455 680**	**709 455 080**	**709 455 380**	29.200
225 - 250	**709 455 281**	**709 455 681**	**709 455 081**	**709 455 381**	28.800
300 - 250	**709 455 286**	**709 455 686**	**709 455 086**	**709 455 386**	46.600
300 - 250	**709 455 287**	**709 455 687**	**709 455 087**	**709 455 387**	46.600
350 - 300	**709 455 284**	**709 455 684**	**709 455 084**	**709 455 384**	48.100
350 - 300	**709 455 285**	**709 455 685**	**709 455 085**	**709 455 385**	51.200
425 - 400	**709 455 288**	**709 455 688**	**709 455 088**	**709 455 388**	73.800
450 - 400	**709 455 292**	**709 455 692**	**709 455 092**	**709 455 392**	77.600
475 - 400	**709 455 290**	**709 455 690**	**709 455 090**	**709 455 390**	86.600
550 - 500	**709 355 276**	**709 355 676**	**709 355 076**	**709 355 376**	96.800
625 - 600			**709 455 295**	**709 455 695**	168.000
675 - 600			**709 455 296**	**709 455 696**	184.000
825 - 800			**709 455 297**	**709 455 697**	222.000

DN-DN (mm)	a (mm)	b (mm)	ID min. (mm)	e (mm)	PN Water (bar)	MOP Gas (bar)	No. of bolt holes flange
50 - 40	176 - 198	170	84	3xM12	16	8	4
65 - 80	170 - 193	200	84	3xM12	16	8	8
100 - 80	182 - 208	241	90	3xM16	16	8	8
125 - 100	187 - 210	270	90	4xM16	16	8	8
125 - 150	187 - 210	285	90	4xM16	16	8	8
150 - 100	236 - 273	312	110	4xM16	16	8	8
200 - 150	246 - 283	371	110	6xM16	16	8	8
225 - 200	250 - 288	415	125	6xM20	16	8	8
225 - 200	250 - 288	415	125	6xM20	16	8	12
225 - 250	216 - 254	415	125	6xM20	16	8	12
225 - 250	216 - 254	415	125	6xM20	16	8	12
300 - 250	330 - 368	495	130	8xM20	16	8	12
300 - 250	330 - 368	495	130	8xM20	16	8	12
350 - 300	302 - 347	580	130	8xM20	16*	8*	12
350 - 300	302 - 347	580	130	8xM20	16*	8*	12

table continued on the next page

DN-DN (mm)	a (mm)	b (mm)	ID min. (mm)	e (mm)	PN Water (bar)	MOP Gas (bar)	No. of bolt holes flange
425 - 400	330 - 367	623	160	10xM20	10	5	16
450 - 400	330 - 367	641	160	10xM20	10	5	16
475 - 400	360 - 397	672	160	10xM20	10	5	16
550 - 500	330 - 367	739	160	12xM20	10	5	20
625 - 600	446 - 476	860	210	14xM20	10	-	20
675 - 600	509 - 539	895	210	14xM20	10	-	20
825 - 800	455 - 485	1070	210	20xM20	10	-	24

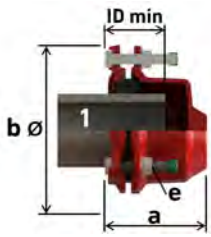

MULTI/JOINT® 3207 Plus Wide Range end cap blind, restraint, Uni/Fiksers

Model:

- Suitable for all kinds of pipe material
- Suitable for water and gas
- Ductile cast iron GGG45 body and clamping ring(s), acc. to EN-GJS-450-10
- RESICOAT® epoxy powder coating, according to GSK standards and EN 14901
- NBR or EPDM gasket, NBR acc. to EN 682 (-5°C up to +50°C), EPDM acc. to EN 681-1 (0°C up to +50°C)
- Angular deflection of max. 8° per socket at installation (based on the middle of the range)
- Stainless steel A4 quality (AISI 316) Uni/Fiksers
- Stainless steel A2 quality (AISI 304) or A4 quality (AISI 316) bolts, nuts and washers
- Hygiene protection included DN50 - DN825

Installation instruction:

- Read the user manual
- For restraint versions, on plastic pipes, the use of an insert stiffener (see accessories) is mandatory, check our technical information
- * DN350 & DN400 for plastic pipe materials = PN 10 bar water / MOP 5 bar gas

Note:

ID min. = minimum insertion depth

DN (mm)	Range 1 (mm)	NBR / A2 Code	EPDM / A2 Code	Weight (kg)	NBR / A4 Code	EPDM / A4 Code	Weight (kg)
50	46 - 71	**709 375 210**	**709 375 610**	2.950	**709 375 010**	**709 375 310**	2.950
65	63 - 90	**709 375 212**	**709 375 612**	3.100	**709 375 012**	**709 375 312**	3.100
80	84 - 105	**709 375 214**	**709 375 614**	4.700	**709 375 014**	**709 375 314**	4.700
100	104 - 132	**709 375 216**	**709 375 616**	5.800	**709 375 016**	**709 375 316**	5.800
125	132 - 155	**709 375 218**	**709 375 618**	7.400	**709 375 018**	**709 375 318**	7.400
150	154 - 192	**709 375 220**	**709 375 620**	10.700	**709 375 020**	**709 375 320**	10.700
200	192 - 232	**709 375 224**	**709 375 624**	11.200	**709 375 024**	**709 375 324**	11.200
225	230 - 268	**709 375 226**	**709 375 626**	17.800	**709 375 026**	**709 375 326**	17.800
250	267 - 310	**709 375 228**	**709 375 628**	28.000	**709 375 028**	**709 375 328**	28.000
300	315 - 356	**709 375 232**	**709 375 632**	35.600	**709 375 032**	**709 375 332**	35.600
400	392 - 433	**709 375 234**	**709 375 634**	48.400	**709 375 034**	**709 375 334**	48.400

DN (mm)	a (mm)	b (mm)	ID min. (mm)	e (mm)	PN Water (bar)	MOP Gas (bar)
50	125 - 147	170	84	3xM12	16	8
65	133 - 156	191	84	3xM12	16	8
80	135 - 157	210	84	3xM12	16	8
100	143 - 169	241	90	3xM16	16	8
125	149 - 172	270	90	4xM16	16	8
150	169 - 206	312	110	4xM16	16	8
200	183 - 220	371	110	6xM16	16	8
225	216 - 254	415	125	6xM20	16	8
250	225 - 268	445	130	6xM20	16	8
300	238 - 276	495	130	8xM20	16	8
400	261 - 303	580	135	10xM20	16*	8*

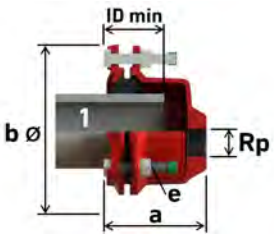

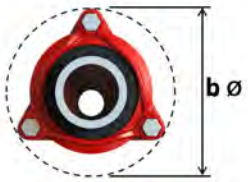

MULTI/JOINT® 3207 Plus Wide Range
end cap threaded, restraint, Uni/Fiksers/A2

Model:

- Suitable for all kinds of pipe material
- Suitable for water and gas
- Ductile cast iron GGG45 body and clamping ring(s), acc. to EN-GJS-450-10
- RESICOAT® epoxy powder coating, according to GSK standards and EN 14901
- NBR or EPDM gasket, NBR acc. to EN 682 (-5°C up to +50°C), EPDM acc. to EN 681-1 (0°C up to +50°C)
- Angular deflection of max. 8° per socket at installation (based on the middle of the range)
- Stainless steel A4 quality (AISI 316) Uni/Fiksers
- Stainless steel A2 quality (AISI 304) or A4 quality (AISI 316) bolts, nuts and washers
- Hygiene protection included DN50 - DN825

Installation instruction:

- Read the user manual
- For restraint versions, on plastic pipes, the use of an insert stiffener (see accessories) is mandatory, check our technical information
- * DN350 & DN400 for plastic pipe materials = PN 10 bar water / MOP 5 bar gas

Note:

ID min. = minimum insertion depth

DN (mm)	Thread Type	Size (inch)	Range 1 (mm)	NBR / A2 Code	EPDM / A2 Code	Weight (kg)
50	Rp	¾	46 - 71	**709 385 204**	**709 385 604**	3.500
50	Rp	1	46 - 71	**709 385 205**	**709 385 605**	3.500
50	Rp	1 ¼	46 - 71	**709 385 206**	**709 385 606**	3.500
50	Rp	1 ½	46 - 71	**709 385 207**	**709 385 607**	3.500
50	Rp	2	46 - 71	**709 385 208**	**709 385 608**	3.500
65	Rp	¾	63 - 90	**709 385 209**	**709 385 609**	4.100
65	Rp	1	63 - 90	**709 385 210**	**709 385 610**	4.100
65	Rp	1 ¼	63 - 90	**709 385 211**	**709 385 611**	4.100
65	Rp	1 ½	63 - 90	**709 385 212**	**709 385 612**	4.100
65	Rp	2	63 - 90	**709 385 213**	**709 385 613**	4.100
80	Rp	¾	84 - 105	**709 385 214**	**709 385 614**	5.100
80	Rp	1	84 - 105	**709 385 215**	**709 385 615**	5.100
80	Rp	1 ¼	84 - 105	**709 385 216**	**709 385 616**	5.100
80	Rp	1 ½	84 - 105	**709 385 217**	**709 385 617**	5.100
80	Rp	2	84 - 105	**709 385 218**	**709 385 618**	5.100
100	Rp	¾	104 - 132	**709 385 219**	**709 385 619**	6.500
100	Rp	1	104 - 132	**709 385 220**	**709 385 620**	6.500
100	Rp	1 ¼	104 - 132	**709 385 221**	**709 385 621**	6.500
100	Rp	1 ½	104 - 132	**709 385 222**	**709 385 622**	6.500
100	Rp	2	104 - 132	**709 385 223**	**709 385 623**	6.500
125	Rp	¾	132 - 155	**709 385 224**	**709 385 624**	7.800
125	Rp	1	132 - 155	**709 385 225**	**709 385 625**	7.800
125	Rp	1 ¼	132 - 155	**709 385 226**	**709 385 626**	7.800
125	Rp	1 ½	132 - 155	**709 385 227**	**709 385 627**	7.800
125	Rp	2	132 - 155	**709 385 228**	**709 385 628**	7.800
150	Rp	¾	154 - 192	**709 385 229**	**709 385 629**	9.600
150	Rp	1	154 - 192	**709 385 230**	**709 385 630**	9.600
150	Rp	1 ¼	154 - 192	**709 385 231**	**709 385 631**	9.600
150	Rp	1 ½	154 - 192	**709 385 232**	**709 385 632**	9.600
150	Rp	2	154 - 192	**709 385 233**	**709 385 633**	9.600
200	Rp	¾	192 - 232	**709 385 234**	**709 385 634**	18.300
200	Rp	1	192 - 232	**709 385 235**	**709 385 635**	18.300
200	Rp	1 ¼	192 - 232	**709 385 236**	**709 385 636**	18.300
200	Rp	1 ½	192 - 232	**709 385 237**	**709 385 637**	18.300
200	Rp	2	192 - 232	**709 385 238**	**709 385 638**	18.300
225	Rp	¾	230 - 268	**709 385 249**	**709 385 649**	20.900
225	Rp	1	230 - 268	**709 385 250**	**709 385 650**	20.900
225	Rp	1 ¼	230 - 268	**709 385 251**	**709 385 651**	20.900
225	Rp	1 ½	230 - 268	**709 385 252**	**709 385 652**	20.900
225	Rp	2	230 - 268	**709 385 253**	**709 385 653**	20.900
250	Rp	¾	267 - 310	**709 385 239**	**709 385 639**	27.100
250	Rp	1	267 - 310	**709 385 240**	**709 385 640**	27.100

table continued on the next page

DN (mm)	Thread Type	Size (inch)	Range 1 (mm)	NBR / A2 Code	EPDM / A2 Code	Weight (kg)
250	Rp	1 ¼	267 - 310	**709 385 241**	**709 385 641**	27.100
250	Rp	1 ½	267 - 310	**709 385 242**	**709 385 642**	27.100
250	Rp	2	267 - 310	**709 385 243**	**709 385 643**	27.100
300	Rp	¾	315 - 356	**709 385 244**	**709 385 644**	34.400
300	Rp	1	315 - 356	**709 385 245**	**709 385 645**	34.400
300	Rp	1 ¼	315 - 356	**709 385 246**	**709 385 646**	34.400
300	Rp	1 ½	315 - 356	**709 385 247**	**709 385 647**	34.400
300	Rp	2	315 - 356	**709 385 248**	**709 385 648**	34.400
400	Rp	¾	392 - 433	**709 385 254**	**709 385 654**	43.100
400	Rp	1	392 - 433	**709 385 255**	**709 385 655**	43.100
400	Rp	1 ¼	392 - 433	**709 385 256**	**709 385 656**	43.100
400	Rp	1 ½	392 - 433	**709 385 257**	**709 385 657**	43.100
400	Rp	2	392 - 433	**709 385 258**	**709 385 658**	43.100

DN (mm)	a (mm)	b (mm)	ID min. (mm)	e (mm)	PN Water (bar)	MOP Gas (bar)
50	125 - 147	170	84	3xM12	16	8
50	125 - 147	170	84	3xM12	16	8
50	125 - 147	170	84	3xM12	16	8
50	125 - 147	170	84	3xM12	16	8
50	125 - 147	170	84	3xM12	16	8
65	133 - 156	191	84	3xM12	16	8
65	133 - 156	191	84	3xM12	16	8
65	133 - 156	191	84	3xM12	16	8
65	133 - 156	191	84	3xM12	16	8
65	133 - 156	191	84	3xM12	16	8
80	135 - 157	210	84	3xM12	16	8
80	135 - 157	210	84	3xM12	16	8
80	135 - 157	210	84	3xM12	16	8
80	135 - 157	210	84	3xM12	16	8
80	135 - 157	210	84	3xM12	16	8
100	143 - 169	241	90	3xM16	16	8
100	143 - 169	241	90	3xM16	16	8
100	143 - 169	241	90	3xM16	16	8
100	143 - 169	241	90	3xM16	16	8
100	143 - 169	241	90	3xM16	16	8
125	149 - 172	270	90	4xM16	16	8
125	149 - 172	270	90	4xM16	16	8
125	149 - 172	270	90	4xM16	16	8
125	149 - 172	270	90	4xM16	16	8
125	149 - 172	270	90	4xM16	16	8
150	169 - 206	312	110	4xM16	16	8
150	169 - 206	312	110	4xM16	16	8
150	169 - 206	312	110	4xM16	16	8
150	169 - 206	312	110	4xM16	16	8
150	169 - 206	312	110	4xM16	16	8
200	183 - 220	371	110	6xM16	16	8
200	183 - 220	371	110	6xM16	16	8
200	183 - 220	371	110	6xM16	16	8
200	183 - 220	371	110	6xM16	16	8
200	183 - 220	371	110	6xM16	16	8
225	216 - 254	415	125	6xM20	16	8
225	216 - 254	415	125	6xM20	16	8
225	216 - 254	415	125	6xM20	16	8
225	216 - 254	415	125	6xM20	16	8
225	216 - 254	415	125	6xM20	16	8
250	225 - 268	445	130	6xM20	16	8
250	225 - 268	445	130	6xM20	16	8
250	225 - 268	445	130	6xM20	16	8
250	225 - 268	445	130	6xM20	16	8
250	225 - 268	445	130	6xM20	16	8
300	238 - 276	495	130	8xM20	16	8
300	238 - 276	495	130	8xM20	16	8

table continued on the next page

DN (mm)	a (mm)	b (mm)	ID min. (mm)	e (mm)	PN Water (bar)	MOP Gas (bar)
300	238 - 276	495	130	8xM20	16	8
300	238 - 276	495	130	8xM20	16	8
300	238 - 276	495	130	8xM20	16	8
400	261 - 303	580	135	10xM20	16*	8*
400	261 - 303	580	135	10xM20	16*	8*
400	261 - 303	580	135	10xM20	16*	8*
400	261 - 303	580	135	10xM20	16*	8*
400	261 - 303	580	135	10xM20	16*	8*

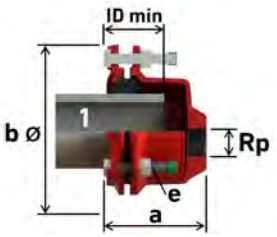

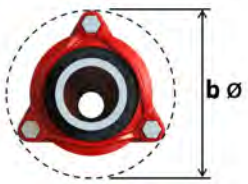

MULTI/JOINT® 3207 Plus Wide Range end cap threaded, restraint, Uni/Fiksers/A4

Model:

- Suitable for all kinds of pipe material
- Suitable for water and gas
- Ductile cast iron GGG45 body and clamping ring(s), acc. to EN-GJS-450-10
- RESICOAT® epoxy powder coating, according to GSK standards and EN 14901
- NBR or EPDM gasket, NBR acc. to EN 682 (-5°C up to +50°C), EPDM acc. to EN 681-1 (0°C up to +50°C)
- Angular deflection of max. 8° per socket at installation (based on the middle of the range)
- Stainless steel A4 quality (AISI 316) Uni/Fiksers
- Stainless steel A2 quality (AISI 304) or A4 quality (AISI 316) bolts, nuts and washers
- Hygiene protection included DN50 - DN825

Installation instruction:

- Read the user manual
- For restraint versions, on plastic pipes, the use of an insert stiffener (see accessories) is mandatory, check our technical information
- * DN350 & DN400 for plastic pipe materials = PN 10 bar water / MOP 5 bar gas

Note:

ID min. = minimum insertion depth

DN (mm)	Thread Type	Size (inch)	Range 1 (mm)	NBR / A4 Code	EPDM / A4 Code	Weight (kg)
50	Rp	¾	46 - 71	**709 385 004**	**709 385 304**	3.500
50	Rp	1	46 - 71	**709 385 005**	**709 385 305**	3.500
50	Rp	1 ¼	46 - 71	**709 385 006**	**709 385 306**	3.500
50	Rp	1 ½	46 - 71	**709 385 007**	**709 385 307**	3.500
50	Rp	2	46 - 71	**709 385 008**	**709 385 308**	3.500
65	Rp	¾	63 - 90	**709 385 009**	**709 385 309**	4.100
65	Rp	1	63 - 90	**709 385 010**	**709 385 310**	4.100
65	Rp	1 ¼	63 - 90	**709 385 011**	**709 385 311**	4.100
65	Rp	1 ½	63 - 90	**709 385 012**	**709 385 312**	4.100
65	Rp	2	63 - 90	**709 385 013**	**709 385 313**	4.100
80	Rp	¾	84 - 105	**709 385 014**	**709 385 314**	5.100
80	Rp	1	84 - 105	**709 385 015**	**709 385 315**	5.100
80	Rp	1 ¼	84 - 105	**709 385 016**	**709 385 316**	5.100
80	Rp	1 ½	84 - 105	**709 385 017**	**709 385 317**	5.100
80	Rp	2	84 - 105	**709 385 018**	**709 385 318**	5.100
100	Rp	¾	104 - 132	**709 385 019**	**709 385 319**	6.500
100	Rp	1	104 - 132	**709 385 020**	**709 385 320**	6.500
100	Rp	1 ¼	104 - 132	**709 385 021**	**709 385 321**	6.500
100	Rp	1 ½	104 - 132	**709 385 022**	**709 385 322**	6.500
100	Rp	2	104 - 132	**709 385 023**	**709 385 323**	6.500
125	Rp	¾	132 - 155	**709 385 024**	**709 385 324**	7.800
125	Rp	1	132 - 155	**709 385 025**	**709 385 325**	7.800
125	Rp	1 ¼	132 - 155	**709 385 026**	**709 385 326**	7.800
125	Rp	1 ½	132 - 155	**709 385 027**	**709 385 327**	7.800
125	Rp	2	132 - 155	**709 385 028**	**709 385 328**	7.800
150	Rp	¾	154 - 192	**709 385 029**	**709 385 329**	9.600
150	Rp	1	154 - 192	**709 385 030**	**709 385 330**	9.600
150	Rp	1 ¼	154 - 192	**709 385 031**	**709 385 331**	9.600
150	Rp	1 ½	154 - 192	**709 385 032**	**709 385 332**	9.600

table continued on the next page

DN (mm)	Thread Type	Size (inch)	Range 1 (mm)	NBR / A4 Code	EPDM / A4 Code	Weight (kg)
150	Rp	2	154 - 192	**709 385 033**	**709 385 333**	9.600
200	Rp	¾	192 - 232	**709 385 034**	**709 385 334**	18.300
200	Rp	1	192 - 232	**709 385 035**	**709 385 335**	18.300
200	Rp	1 ¼	192 - 232	**709 385 036**	**709 385 336**	18.300
200	Rp	1 ½	192 - 232	**709 385 037**	**709 385 337**	18.300
200	Rp	2	192 - 232	**709 385 038**	**709 385 338**	18.300
225	Rp	¾	230 - 268	**709 385 049**	**709 385 349**	20.900
225	Rp	1	230 - 268	**709 385 050**	**709 385 350**	20.900
225	Rp	1 ¼	230 - 268	**709 385 051**	**709 385 351**	20.900
225	Rp	1 ½	230 - 268	**709 385 052**	**709 385 352**	20.900
225	Rp	2	230 - 268	**709 385 053**	**709 385 353**	20.900
250	Rp	¾	267 - 310	**709 385 039**	**709 385 339**	27.100
250	Rp	1	267 - 310	**709 385 040**	**709 385 340**	27.100
250	Rp	1 ¼	267 - 310	**709 385 041**	**709 385 341**	27.100
250	Rp	1 ½	267 - 310	**709 385 042**	**709 385 342**	27.100
250	Rp	2	267 - 310	**709 385 043**	**709 385 343**	27.100
300	Rp	¾	315 - 356	**709 385 044**	**709 385 344**	34.400
300	Rp	1	315 - 356	**709 385 045**	**709 385 345**	34.400
300	Rp	1 ¼	315 - 356	**709 385 046**	**709 385 346**	34.400
300	Rp	1 ½	315 - 356	**709 385 047**	**709 385 347**	34.400
300	Rp	2	315 - 356	**709 385 048**	**709 385 348**	34.400
400	Rp	¾	392 - 433	**709 385 054**	**709 385 354**	43.100
400	Rp	1	392 - 433	**709 385 055**	**709 385 355**	43.100
400	Rp	1 ¼	392 - 433	**709 385 056**	**709 385 356**	43.100
400	Rp	1 ½	392 - 433	**709 385 057**	**709 385 357**	43.100
400	Rp	2	392 - 433	**709 385 058**	**709 385 358**	43.100

DN (mm)	a (mm)	b (mm)	ID min. (mm)	e (mm)	PN Water (bar)	MOP Gas (bar)
50	125 - 147	170	84	3xM12	16	8
50	125 - 147	170	84	3xM12	16	8
50	125 - 147	170	84	3xM12	16	8
50	125 - 147	170	84	3xM12	16	8
50	125 - 147	170	84	3xM12	16	8
65	133 - 156	191	84	3xM12	16	8
65	133 - 156	191	84	3xM12	16	8
65	133 - 156	191	84	3xM12	16	8
65	133 - 156	191	84	3xM12	16	8
65	133 - 156	191	84	3xM12	16	8
80	135 - 157	210	84	3xM12	16	8
80	135 - 157	210	84	3xM12	16	8
80	135 - 157	210	84	3xM12	16	8
80	135 - 157	210	84	3xM12	16	8
80	135 - 157	210	84	3xM12	16	8
100	143 - 169	241	90	3xM16	16	8
100	143 - 169	241	90	3xM16	16	8
100	143 - 169	241	90	3xM16	16	8
100	143 - 169	241	90	3xM16	16	8
100	143 - 169	241	90	3xM16	16	8
125	149 - 172	270	90	4xM16	16	8
125	149 - 172	270	90	4xM16	16	8
125	149 - 172	270	90	4xM16	16	8
125	149 - 172	270	90	4xM16	16	8
125	149 - 172	270	90	4xM16	16	8
150	169 - 206	312	110	4xM16	16	8
150	169 - 206	312	110	4xM16	16	8
150	169 - 206	312	110	4xM16	16	8
150	169 - 206	312	110	4xM16	16	8
150	169 - 206	312	110	4xM16	16	8
200	183 - 220	371	110	6xM16	16	8
200	183 - 220	371	110	6xM16	16	8
200	183 - 220	371	110	6xM16	16	8
200	183 - 220	371	110	6xM16	16	8

table continued on the next page

DN (mm)	a (mm)	b (mm)	ID min. (mm)	e (mm)	PN Water (bar)	MOP Gas (bar)
200	183 - 220	371	110	6xM16	16	8
225	216 - 254	415	125	6xM20	16	8
225	216 - 254	415	125	6xM20	16	8
225	216 - 254	415	125	6xM20	16	8
225	216 - 254	415	125	6xM20	16	8
225	216 - 254	415	125	6xM20	16	8
250	225 - 268	445	130	6xM20	16	8
250	225 - 268	445	130	6xM20	16	8
250	225 - 268	445	130	6xM20	16	8
250	225 - 268	445	130	6xM20	16	8
250	225 - 268	445	130	6xM20	16	8
300	238 - 276	495	130	8xM20	16	8
300	238 - 276	495	130	8xM20	16	8
300	238 - 276	495	130	8xM20	16	8
300	238 - 276	495	130	8xM20	16	8
300	238 - 276	495	130	8xM20	16	8
400	261 - 303	580	135	10xM20	16*	8*
400	261 - 303	580	135	10xM20	16*	8*
400	261 - 303	580	135	10xM20	16*	8*
400	261 - 303	580	135	10xM20	16*	8*
400	261 - 303	580	135	10xM20	16*	8*

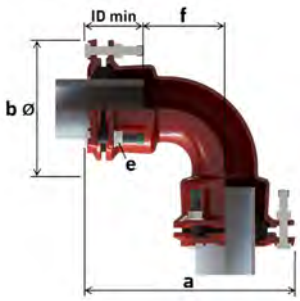

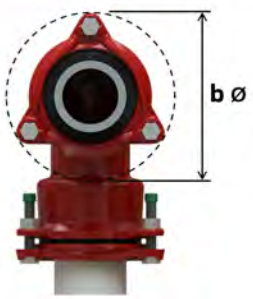

MULTI/JOINT® 3400 Plus Wide Range
Bend, non restraint

Model:

- Suitable for all kinds of pipe material
- Suitable for water and gas
- Ductile cast iron GGG45 body and clamping ring(s), acc. to EN-GJS-450-10
- RESICOAT® epoxy powder coating, according to GSK standards and EN 14901
- NBR or EPDM gasket, NBR acc. to EN 682 (-5°C up to +50°C), EPDM acc. to EN 681-1 (0°C up to +50°C)
- Angular deflection of max. 8° per socket at installation (based on the middle of the range)
- Stainless steel A2 quality (AISI 304) or A4 quality (AISI 316) bolts, nuts and washers
- Hygiene protection included DN50 - DN825

Installation instruction:

- Read the user manual
- For all plastic pipes, the use of an insert stiffener (see accessories) is recommended and in some cases mandatory. Check our technical information.

Note:

ID min. = minimum insertion depth

DN (mm)	Range 1 (mm)	Range 3 (mm)	NBR / A2 Code	EPDM / A2 Code	NBR / A4 Code	EPDM / A4 Code	Weight (kg)
80	84 - 105	84 - 105	**709 471 214**	**709 471 614**	**709 471 014**	**709 471 314**	9.200
100	104 - 132	104 - 132	**709 471 216**	**709 471 616**	**709 471 016**	**709 471 316**	13.400
150	154 - 192	154 - 192	**709 471 220**	**709 471 620**	**709 471 020**	**709 471 320**	26.300

DN (mm)	a (mm)	b (mm)	ID min. (mm)	e (mm)	f (mm)	PN Water (bar)	MOP Gas (bar)
80	300 - 322	210	84	3xM12	100	25	8
100	359 - 385	241	90	3xM16	125	25	8
150	441 - 478	312	110	4xM16	175	25	8

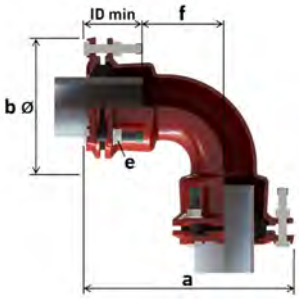

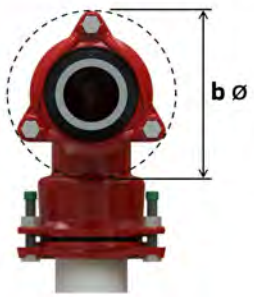

MULTI/JOINT® 3407 Plus Wide Range
Bend, restraint, Uni/Fiksers

Model:

- Suitable for all kinds of pipe material
- Suitable for water and gas
- Ductile cast iron GGG45 body and clamping ring(s), acc. to EN-GJS-450-10
- RESICOAT® epoxy powder coating, according to GSK standards and EN 14901
- NBR or EPDM gasket, NBR acc. to EN 682 (-5°C up to +50°C), EPDM acc. to EN 681-1 (0°C up to +50°C)
- Angular deflection of max. 8° per socket at installation (based on the middle of the range)
- Stainless steel A4 quality (AISI 316) Uni/Fiksers
- Stainless steel A2 quality (AISI 304) or A4 quality (AISI 316) bolts, nuts and washers
- Hygiene protection included DN50 - DN825

Installation instruction:

- Read the user manual
- For restraint versions, on plastic pipes, the use of an insert stiffener (see accessories) is mandatory, check our technical information

Note:

ID min. = minimum insertion depth

DN (mm)	Range 1 (mm)	Range 3 (mm)	NBR / A2 Code	EPDM / A2 Code	Weight (kg)
80	84 - 105	84 - 105	**709 475 214**	**709 475 614**	9.200
100	104 - 132	104 - 132	**709 475 216**	**709 475 616**	13.400
150	154 - 192	154 - 192	**709 475 220**	**709 475 620**	26.300

DN (mm)	NBR / A4 Code	EPDM / A4 Code	Weight (kg)
80	**709 475 014**	**709 475 314**	9.200
100	**709 475 016**	**709 475 316**	13.400
150	**709 475 020**	**709 475 320**	26.300

DN (mm)	a (mm)	b (mm)	ID min. (mm)	e (mm)	f (mm)	PN Water (bar)	MOP Gas (bar)
80	300 - 322	210	84	3xM12	100	16	8
100	359 - 385	241	90	3xM16	125	16	8
150	441 - 478	312	110	4xM16	175	16	8

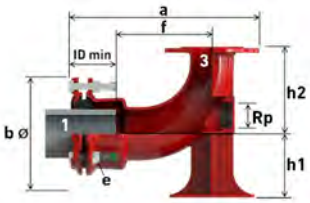

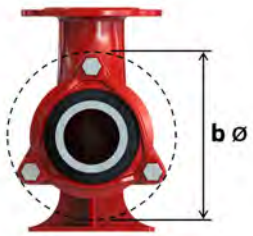

MULTI/JOINT® 3557 Plus Wide Range
Reduced duckfoot, restraint, Uni/Fiksers

Model:

- Suitable for all kinds of pipe material
- Suitable for water and gas
- Ductile cast iron GGG45 body and clamping ring(s), acc. to EN-GJS-450-10
- RESICOAT® epoxy powder coating, according to GSK standards and EN 14901
- NBR or EPDM gasket, NBR acc. to EN 682 (-5°C up to +50°C), EPDM acc. to EN 681-1 (0°C up to +50°C)
- Angular deflection of max. 8° per socket at installation (based on the middle of the range)
- Stainless steel A4 quality (AISI 316) Uni/Fiksers
- Stainless steel A2 quality (AISI 304) or A4 quality (AISI 316) bolts, nuts and washers
- Threaded outlet 2 inch
- Hygiene protection included DN50 - DN825

Installation instruction:

- Read the user manual
- For restraint versions, on plastic pipes, the use of an insert stiffener (see accessories) is mandatory, check our technical information

Note:

ID min. = minimum insertion depth

Thread Type	Size (inch)	DN (mm)	DN-DN (mm)	Range 1 (mm)	Flange 3 (mm)	Drilling pattern
Rp	2	50	50 - 80	46 - 71	80	PN16
Rp	2	65	65 - 80	63 - 90	80	PN10
Rp	2	65	65 - 80	63 - 90	80	PN16
Rp	2	100	100 - 80	104 - 132	80	PN16
Rp	2	125	125 - 80	132 - 155	80	PN10
Rp	2	125	125 - 80	132 - 155	80	PN16
Rp	2	150	150 - 80	154 - 192	80	PN10
Rp	2	150	150 - 80	154 - 192	80	PN16

NBR / A2 Code	EPDM / A2 Code	NBR / A4 Code	EPDM / A4 Code	Weight (kg)
709 495 218	**709 495 618**	**709 495 018**	**709 495 318**	12.700
709 495 236	**709 495 636**	**709 495 036**	**709 495 336**	14.600
709 495 230	**709 495 630**	**709 495 030**	**709 495 330**	14.600
709 495 223	**709 495 623**	**709 495 023**	**709 495 323**	15.800
709 495 261	**709 495 661**	**709 495 061**	**709 495 361**	19.400
709 495 248	**709 495 648**	**709 495 048**	**709 495 348**	19.400
709 495 273	**709 495 673**	**709 495 073**	**709 495 373**	19.800
709 495 267	**709 495 667**	**709 495 067**	**709 495 367**	19.800

a (mm)	b (mm)	ID min. (mm)	e (mm)	f (mm)	h1 (mm)	h2 (mm)	PN Water (bar)	No. of bolt holes flange
342 - 364	170	84	3xM12	140	90	174	16	8
386 - 408	191	84	3xM12	170	90	180	16	4
386 - 408	191	84	3xM12	170	90	180	16	8
404 - 430	241	90	3xM16	190	135	184	16	8
389 - 412	270	90	4xM16	170	135	184	16	4
389 - 412	270	90	4xM16	170	135	184	16	8
418 - 455	312	110	4xM16	180	160	184	16	4
418 - 455	312	110	4xM16	180	160	184	16	8

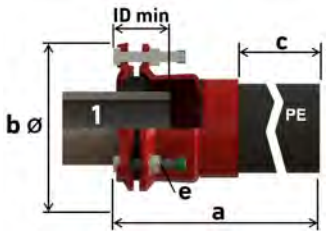

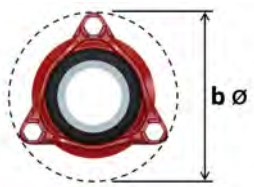

MULTI/JOINT® 3067 Plus Wide Range
PE adaptor, restraint, Uni/Fiksers

Model:

- Suitable for all kinds of pipe material (MULTI/JOINT® 3067 part)
- Suitable for water and gas
- Ductile cast iron GGG45 body and clamping ring(s), acc. to EN-GJS-450-10
- PE: PE100 SDR11
- RESICOAT® epoxy powder coating, according to GSK standards and EN 14901
- NBR or EPDM gasket, NBR acc. to EN 682 (-5°C up to +50°C), EPDM acc. to EN 681-1 (0°C up to +50°C)
- Angular deflection of max. 8° per socket at installation (based on the middle of the range)
- Stainless steel A4 quality (AISI 316) Uni/Fiksers
- Stainless steel A2 quality (AISI 304) or A4 quality (AISI 316) bolts, nuts and washers
- Hygiene protection included DN50 - DN825

Installation instruction:

- Read the user manual
- For restraint versions, on plastic pipes, the use of an insert stiffener (see accessories) is mandatory, check our technical information

Note:

ID min. = minimum insertion depth

DN (mm)	Range 1 (mm)	PE outlet (mm)	NBR / A2 Code	EPDM / A2 Code	Weight (kg)
50	46 - 71	50	**709 365 209**	**709 365 609**	3.600
50	46 - 71	63	**709 365 210**	**709 365 610**	4.000
65	63 - 90	63	**709 365 211**	**709 365 611**	4.400
65	63 - 90	75	**709 365 212**	**709 365 612**	4.900
80	84 - 105	90	**709 365 214**	**709 365 614**	5.400
80	84 - 105	110	**709 365 215**	**709 365 615**	6.000
100	104 - 132	90	**709 465 216**	**709 465 616**	6.900
100	104 - 132	110	**709 365 216**	**709 365 616**	8.300
100	104 - 132	125	**709 465 217**	**709 465 617**	6.900
125	132 - 155	110	**709 465 218**	**709 465 618**	8.900
125	132 - 155	125	**709 365 218**	**709 365 618**	11.200
125	132 - 155	140	**709 465 219**	**709 465 619**	8.900
125	132 - 155	160	**709 465 221**	**709 465 621**	12.300
150	154 - 192	160	**709 365 220**	**709 365 620**	15.300
150	154 - 192	180	**709 465 220**	**709 465 620**	18.600
200	192 - 232	200	**709 365 224**	**709 365 624**	27.600
200	192 - 232	225	**709 465 224**	**709 465 624**	29.000
250	267 - 310	250	**709 365 228**	**709 365 628**	44.200
250	267 - 310	280	**709 465 228**	**709 465 628**	41.900
300	315 - 356	315	**709 365 232**	**709 365 632**	63.400

DN (mm)	NBR / A4 Code	EPDM / A4 Code	Weight (kg)
50	**709 365 009**	**709 365 309**	3.600
50	**709 365 010**	**709 365 310**	4.000
65	**709 365 011**	**709 365 311**	4.400
65	**709 365 012**	**709 365 312**	4.900
80	**709 365 014**	**709 365 314**	5.400
80	**709 365 015**	**709 365 315**	6.000
100	**709 465 016**	**709 465 316**	6.900
100	**709 365 016**	**709 365 316**	8.300
100	**709 465 017**	**709 465 317**	6.900
125	**709 465 018**	**709 465 318**	8.900
125	**709 365 018**	**709 365 318**	11.200
125	**709 465 019**	**709 465 319**	8.900
125	**709 465 021**	**709 465 321**	12.300
150	**709 365 020**	**709 365 320**	15.300
150	**709 465 020**	**709 465 320**	18.600
200	**709 365 024**	**709 365 324**	27.600

table continued on the next page

DN (mm)	NBR / A4 Code	EPDM / A4 Code	Weight (kg)
200	**709 465 024**	**709 465 324**	29.000
250	**709 365 028**	**709 365 328**	44.200
250	**709 465 028**	**709 465 328**	41.900
300	**709 365 032**	**709 365 332**	63.400

DN (mm)	a (mm)	b (mm)	c (mm)	ID min. (mm)	e (mm)	PN Water (bar)	MOP Gas (bar)
50	615 - 637	170	429.0	84	3xM12	16	8
50	615 - 637	170	464.0	84	3xM12	16	8
65	621 - 644	191	429.0	84	3xM12	16	8
65	621 - 644	191	460.7	84	3xM12	16	8
80	622 - 644	210	457.8	84	3xM12	16	8
80	622 - 644	210	461.0	84	3xM12	16	8
100	624 - 650	241	397.0	90	3xM16	16	8
100	624 - 650	241	397.0	90	3xM16	16	8
100	628 - 654	241	445.5	90	3xM16	16	8
125	637 - 660	270	390.0	90	4xM16	16	8
125	637 - 660	270	390.0	90	4xM16	16	8
125	635 - 658	270	443.0	90	4xM16	16	8
125	507 - 530	270	445.0	90	4xM16	16	8
150	657 - 694	312	364.0	110	4xM16	16	8
150	655 - 692	312	430.0	110	4xM16	16	8
200	671 - 708	371	333.0	110	6xM16	16	8
200	671 - 708	371	422.0	110	6xM16	16	8
250	720 - 763	445	294.0	130	6xM20	16	8
250	716 - 759	445	408.2	130	6xM20	16	8
300	747 - 785	495	400.3	130	8xM20	16	8

MULTI/JOINT® 3080 Plus Wide Range
Spigot end, non restraint

Model:

- Suitable for all kinds of pipe material
- Suitable for water and gas
- Ductile cast iron GGG45 body and clamping ring(s), acc. to EN-GJS-450-10
- RESICOAT® epoxy powder coating, according to GSK standards and EN 14901
- NBR or EPDM gasket, NBR acc. to EN 682 (-5°C up to +50°C), EPDM acc. to EN 681-1 (0°C up to +50°C)
- Angular deflection of max. 8° per socket at installation (based on the middle of the range)
- Stainless steel A2 quality (AISI 304) or A4 quality (AISI 316) bolts, nuts and washers
- Hygiene protection included DN50 - DN825

Installation instruction:

- Read the user manual
- For all plastic pipes, the use of an insert stiffener (see accessories) is recommended and in some cases mandatory. Check our technical information.

Note:

ID min. = minimum insertion depth

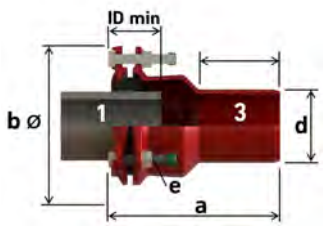

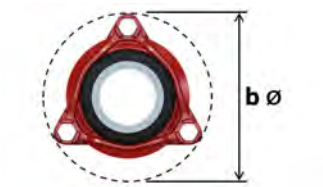

DN (mm)	d3 (mm)	Range 1 (mm)	NBR / A2 Code	EPDM / A2 Code	Weight (kg)	NBR / A4 Code	EPDM / A4 Code	Weight (kg)
50	63	46 - 71	**709 331 210**	**709 331 610**	3.800	**709 331 010**	**709 331 310**	3.800
100	110	104 - 132	**709 331 216**	**709 331 616**	7.400	**709 331 016**	**709 331 316**	7.400
150	160	154 - 192	**709 331 220**	**709 331 620**	13.800	**709 331 020**	**709 331 320**	13.800
200	200	192 - 232	**709 331 229**	**709 331 629**	14.070	**709 331 029**	**709 331 329**	14.070

table continued on the next page

DN (mm)	d3 (mm)	a (mm)	b (mm)	ID min. (mm)	d (mm)	e (mm)	L (mm)	PN Water (bar)	MOP Gas (bar)
50	63	225 - 247	170	84	100	3xM12	75	25	8
100	110	257 - 283	241	90	110	3xM16	120	25	8
150	160	307 - 344	312	110	120	4xM16	135	25	8
200	200	333 - 370	371	110	140	6xM16	145	25	8

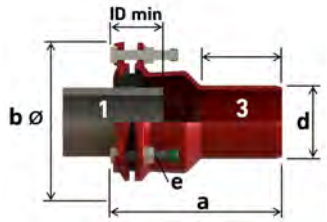

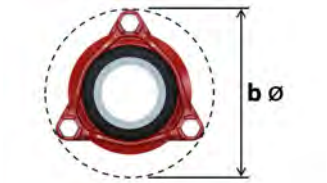

MULTI/JOINT® 3087 Plus Wide Range
Spigot end, restraint, Uni/Fiksers

Model:

- Suitable for all kinds of pipe material
- Suitable for water and gas
- Ductile cast iron GGG45 body and clamping ring(s), acc. to EN-GJS-450-10
- RESICOAT® epoxy powder coating, according to GSK standards and EN 14901
- NBR or EPDM gasket, NBR acc. to EN 682 (-5°C up to +50°C), EPDM acc. to EN 681-1 (0°C up to +50°C)
- Angular deflection of max. 8° per socket at installation (based on the middle of the range)
- Stainless steel A4 quality (AISI 316) Uni/Fiksers
- Stainless steel A2 quality (AISI 304) or A4 quality (AISI 316) bolts, nuts and washers
- Hygiene protection included DN50 - DN825

Installation instruction:

- Read the user manual
- For restraint versions, on plastic pipes, the use of an insert stiffener (see accessories) is mandatory, check our technical information

Note:

ID min. = minimum insertion depth

DN (mm)	d3 (mm)	Range 1 (mm)	NBR / A2 Code	EPDM / A2 Code	NBR / A4 Code	EPDM / A4 Code	Weight (kg)
50	63	46 - 71	**709 335 210**	**709 335 610**	**709 335 010**	**709 335 310**	3.800
100	110	104 - 132	**709 335 216**	**709 335 616**	**709 335 016**	**709 335 316**	7.400
150	160	154 - 192	**709 335 220**	**709 335 620**	**709 335 020**	**709 335 320**	13.800
200	200	192 - 232	**709 335 229**	**709 335 629**	**709 335 029**	**709 335 329**	14.070

DN (mm)	d3 (mm)	a (mm)	b (mm)	ID min. (mm)	e (mm)	L (mm)	PN Water (bar)	MOP Gas (bar)
50	63	225 - 247	170	84	3xM12	75	16	8
100	110	257 - 283	241	90	3xM16	120	16	8
150	160	307 - 344	312	110	4xM16	135	16	8
200	200	333 - 370	371	110	6xM16	145	16	8

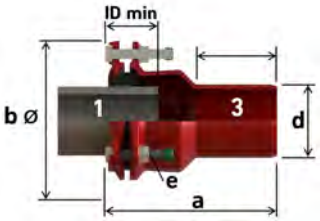

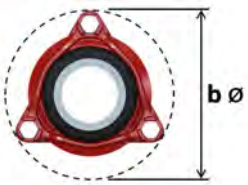

MULTI/JOINT® 3180 Plus Wide Range
Reduced spigot end, non restraint

Model:

- Suitable for all kinds of pipe material
- Suitable for water and gas
- Ductile cast iron GGG45 body and clamping ring(s), acc. to EN-GJS-450-10
- RESICOAT® epoxy powder coating, according to GSK standards and EN 14901
- NBR or EPDM gasket, NBR acc. to EN 682 (-5°C up to +50°C), EPDM acc. to EN 681-1 (0°C up to +50°C)
- Angular deflection of max. 8° per socket at installation (based on the middle of the range)
- Stainless steel A2 quality (AISI 304) or A4 quality (AISI 316) bolts, nuts and washers
- Hygiene protection included DN50 - DN825

Installation instruction:

- Read the user manual
- For all plastic pipes, the use of an insert stiffener (see accessories) is recommended and in some cases mandatory. Check our technical information.

Note:

ID min. = minimum insertion depth

DN (mm)	d3 (mm)	Range 1 (mm)	NBR / A2 Code	EPDM / A2 Code	Weight (kg)	NBR / A4 Code	EPDM / A4 Code	Weight (kg)
80	110	84 - 105	**709 341 224**	**709 341 624**	5.700	**709 341 024**	**709 341 324**	5.700

DN (mm)	d3 (mm)	a (mm)	b (mm)	ID min. (mm)	e (mm)	l (mm)	PN Water (bar)	MOP Gas (bar)
80	110	242 - 264	210	84	3xM12	120	25	8

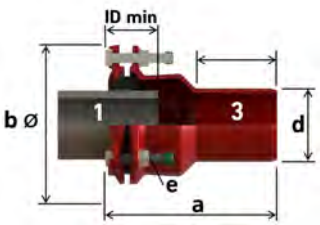

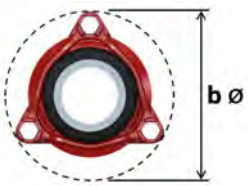

MULTI/JOINT® 3187 Plus Wide Range
Reduced spigot end, restraint, Uni/Fiksers

Model:

- Suitable for all kinds of pipe material
- Suitable for water and gas
- Ductile cast iron GGG45 body and clamping ring(s), acc. to EN-GJS-450-10
- RESICOAT® epoxy powder coating, according to GSK standards and EN 14901
- NBR or EPDM gasket, NBR acc. to EN 682 (-5°C up to +50°C), EPDM acc. to EN 681-1 (0°C up to +50°C)
- Angular deflection of max. 8° per socket at installation (based on the middle of the range)
- Stainless steel A4 quality (AISI 316) Uni/Fiksers
- Stainless steel A2 quality (AISI 304) or A4 quality (AISI 316) bolts, nuts and washers
- Hygiene protection included DN50 - DN825

Installation instruction:

- Read the user manual
- For restraint versions, on plastic pipes, the use of an insert stiffener (see accessories) is mandatory, check our technical information

Note:

ID min. = minimum insertion depth

DN (mm)	d3 (mm)	Range 1 (mm)	NBR / A2 Code	EPDM / A2 Code	NBR / A4 Code	EPDM / A4 Code	Weight (kg)
80	110	84 - 105	**709 345 224**	**709 345 624**	**709 345 024**	**709 345 324**	5.700

DN (mm)	d3 (mm)	a (mm)	b (mm)	ID min. (mm)	e (mm)	l (mm)	PN Water (bar)	MOP Gas (bar)
80	110	242 - 264	210	84	3xM12	120	16	8

MULTI/JOINT® Accessories

MULTI/JOINT® Accessories

Insert stiffener Economy

Model:

- Suitable for PE and PVC pipes
- Stainless steel A2 quality (AISI 304), optional A4 quality (AISI 316)
- For pipe sizes > d355 use an insert stiffener with wedge
- Other pipe sizes < d355 available on request

d x e (mm)	SDR	L (mm)	Code	Weight (kg)
40 x 3,7	11.0	100	**709 026 391**	0.100
40 x 2,3	17.6 / 17.0	100	**709 026 392**	0.100
50 x 4,6	11.0	100	**709 026 203**	0.130
50 x 2,9	17.6 / 17.0	100	**709 026 206**	0.130
63 x 5,8	11.0	100	**709 026 211**	0.160
63 x 3,6	17.6 / 17.0	100	**709 026 214**	0.160
63 x 2,0	33	100	**709 026 217**	0.160
63 x 1,5	41	100	**709 026 415**	0.160
75 x 6,8	11.0	100	**709 026 220**	0.190
75 x 4,3	17.6 / 17.0	100	**709 026 223**	0.190
75 x 1,9	41	100	**709 026 227**	0.190
90 x 8,2	11.0	120	**709 026 230**	0.270
90 x 5,2	17.6 / 17.0	120	**709 026 233**	0.270
90 x 2,8	33	120	**709 026 236**	0.270
90 x 2,2	41	120	**709 026 238**	0.270
110 x 10,0	11.0	120	**709 026 242**	0.330
110 x 6,3	17.6 / 17.0	120	**709 026 245**	0.330
110 x 3,4	33	120	**709 026 248**	0.330
110 x 2,7	41	120	**709 026 250**	0.330
125 x 11,4	11.0	120	**709 026 254**	0.380
125 x 7,2	17.6 / 17.0	120	**709 026 257**	0.380
140 x 12,7	11.0	140	**709 026 266**	0.490
140 x 8,0	17.6 / 17.0	140	**709 026 269**	0.490
160 x 14,6	11.0	140	**709 026 278**	0.850
160 x 9,1	17.6 / 17.0	140	**709 026 281**	0.850
160 x 4,9	33	140	**709 026 284**	0.850
160 x 4,0	41	140	**709 026 286**	0.850
180 x 16,4	11.0	140	**709 026 290**	0.950
180 x 10,7	17.0	140	**709 026 408**	0.950
180 x 10,3	17.6	140	**709 026 293**	0.950
200 x 18,2	11.0	160	**709 026 302**	1.210
200 x 11,9	17.0	160	**709 026 409**	1.210
200 x 11,4	17.6	160	**709 026 305**	1.210
200 x 6,1	33	160	**709 026 308**	1.210
200 x 4,9	41	160	**709 026 310**	1.210
225 x 20,5	11.0	160	**709 026 314**	1.360
225 x 13,4	17.0	160	**709 026 410**	1.360
225 x 12,8	17.6	160	**709 026 317**	1.360
250 x 22,8	11.0	160	**709 026 326**	2.010
250 x 14,8	17.0	160	**709 026 411**	2.010
250 x 14,3	17.6	160	**709 026 329**	2.010
250 x 7,6	33	160	**709 026 332**	2.010
250 x 6,1	41	160	**709 026 334**	2.010
280 x 25,5	11.0	160	**709 026 338**	2.250
280 x 16,6	17.0	160	**709 026 340**	2.250
280 x 16,0	17.6	160	**709 026 341**	2.250
315 x 28,7	11.0	160	**709 026 350**	2.530
315 x 18,7	17.0	160	**709 026 413**	2.530
315 x 17,9	17.6	160	**709 026 353**	2.530
315 x 9,6	33	160	**709 026 356**	2.530

table continued on the next page

d x e (mm)	SDR	L (mm)	Code	Weight (kg)
315 x 7,7	41	160	**709 026 358**	2.530
355 x 32,3	11.0	160	**709 026 362**	2.850
355 x 21,1	17.0	160	**709 026 414**	2.850
355 x 20,2	17.6	160	**709 026 365**	2.850

Insert stiffener with Wedge

Model:

- Suitable for PE and PVC pipes
- Stainless steel A2 quality (AISI 304), optional A4 quality (AISI 316)
- Other pipe sizes available on request
- For MULTI/JOINT® DN625 till DN800 please see MJ DN625 - DN800 insert stiffeners

d x e (mm)	SDR	L (mm)	Code	Weight (kg)
63 x 3.6	17.6 / 17.0	175	**709 026 012**	0.220
63 x 5.8	11.0	175	**709 026 016**	0.210
63 x 8.7	7.5	175	**709 026 018**	0.190
75 x 4.3	17.6 / 17.0	175	**709 026 022**	0.260
75 x 6.9	11.0	175	**709 026 026**	0.240
90 x 5.1	17.6 / 17.0	175	**709 026 032**	0.310
90 x 8.2	11.0	175	**709 026 036**	0.290
90 x 12.5	7.5	175	**709 026 038**	0.260
110 x 6.3	17.6 / 17.0	175	**709 026 042**	0.450
110 x 10.0	11.0	175	**709 026 046**	0.420
110 x 15.2	7.5	175	**709 026 048**	0.370
125 x 7.1	17.6 / 17.0	175	**709 026 052**	0.510
125 x 11.4	11.0	175	**709 026 056**	0.470
140 x 8.0	17.6 / 17.0	175	**709 026 062**	0.560
140 x 12.8	11.0	175	**709 026 066**	0.520
160 x 4.8	33.0	200	**709 026 070**	0.920
160 x 9.1	17.6 / 17.0	200	**709 026 072**	0.870
160 x 14.6	11.0	200	**709 026 076**	0.800
180 x 10.2	17.6 / 17.0	200	**709 026 082**	0.980
180 x 16.4	11.0	200	**709 026 086**	0.900
200 x 11.4	17.6 / 17.0	200	**709 026 092**	1.150
200 x 18.2	11.0	200	**709 026 096**	1.020
225 x 12.8	17.6 / 17.0	225	**709 026 102**	1.660
225 x 20.5	11.0	225	**709 026 106**	1.530
250 x 14.2	17.6 / 17.0	225	**709 026 115**	1.850
250 x 22.8	11.0	225	**709 026 116**	1.700
280 x 16.6	17.6 / 17.0	225	**709 026 127**	2.070
280 x 25.5	11.0	225	**709 026 126**	1.920
315 x 17.9	17.6	225	**709 026 125**	2.340
315 x 28.7	11.0	225	**709 026 124**	2.160
355 x 10.8	33.0	225	**709 026 132**	3.760
355 x 20.1	17.6	225	**709 026 129**	2.710
355 x 32.3	11.0	225	**709 026 128**	2.510
400 x 15.4	26.0	225	**709 026 140**	3.170
400 x 22.7	17.6	225	**709 026 139**	3.050
400 x 36.4	11.0	225	**709 026 138**	2.820
450 x 25.5	17.6	225	**709 026 149**	4.200
450 x 41.0	11.0	225	**709 026 148**	4.200
500 x 28.3	17.6	225	**709 026 159**	4.660
500 x 45.5	11.0	225	**709 026 158**	4.660
560 x 31.7	17.6	225	**709 026 169**	5.230
560 x 51.0	11.0	225	**709 026 168**	5.230
630 x 35.7	17.6	225	**709 026 179**	5.870
630 x 57.3	11.0	225	**709 026 178**	5.870
710 x 40.2	17.6	225	**709 026 189**	6.620
710 x 64.5	11.0	225	**709 026 188**	6.620

table continued on the next page

d x e (mm)	SDR	L (mm)	Code	Weight (kg)
710 x 64.5	11.0	225	**709 026 188**	6.620
800 x 45.3	17.6	225	**709 026 199**	7.460
800 x 72.7	11.0	225	**709 026 198**	7.460
900 x 51.2	17.6	225	**709 026 183**	8.390
900 x 81.8	11.0	225	**709 026 182**	8.390
1000 x 56.8	17.6	225	**709 026 191**	9.330
1000 x 90.9	11.0	225	**709 026 192**	9.330
1200 x 109.1	11.0	225	**709 026 184**	11.190
1400 x 79.6	17.6	225	**709 026 187**	13.060
1400 x 127.3	11.0	225	**709 026 186**	13.060
1600 x 90.9	17.6	225	**709 026 196**	14.920
1600 x 145.5	11.0	225	**709 026 195**	14.920

Insert stiffener with wedge MJ DN625 - DN800

Model:

- Suitable for PE and PVC pipes
- Stainless steel A2 quality (AISI 304), optional A4 quality (AISI 316)
- Other pipe sizes available on request

d x e (mm)	SDR	L (mm)	Code	Weight (kg)
630 x 57.3	11	300	**709 026 450**	17.000
630 x 37.1	17	300	**709 026 451**	18.500
630 x 35.7	17.6	300	**709 026 452**	18.500
630 x 24.1	26	300	**709 026 453**	19.000
710 x 64.5	11	300	**709 026 455**	19.000
710 x 41.8	17	300	**709 026 456**	21.000
710 x 40.2	17.6	300	**709 026 457**	21.000
710 x 33.8	21	300	**709 026 458**	23.000
710 x 27.3	26	300	**709 026 459**	23.000
710 x 21.5	33	300	**709 026 460**	24.000
800 x 72.7	11	300	**709 026 465**	22.000
800 x 47.0	17	300	**709 026 466**	23.000
800 x 45.3	17.6	300	**709 026 467**	23.000
800 x 38.1	21	300	**709 026 468**	24.000
800 x 30.7	26	300	**709 026 469**	24.000
800 x 24.2	33	300	**709 026 470**	25.000

Uni/Fleks ring

Model:

- Consists of a segmented plastic ring and Varioseal (gasket)
- NBR or EPDM gasket, NBR acc. to EN 682 (-5°C up to +50°C), EPDM acc. to EN 681-1 (0°C up to +50°C)
- non restraint

DN (mm)	Range (mm)	NBR Code	EPDM Code	Weight (kg)
50	46 - 71	**709 390 030**	**709 390 130**	0.192
65	63 - 90	**709 390 032**	**709 390 132**	3.840
80	84 - 105	**709 390 034**	**709 390 134**	0.267
100	104 - 132	**709 390 036**	**709 390 136**	0.001
125	132 - 155	**709 390 038**	**709 390 138**	0.627
150	154 - 192	**709 390 040**	**709 390 140**	0.838
200	192 - 232	**709 390 043**	**709 390 143**	0.987
225	230 - 268	**709 390 046**	**709 390 146**	1.100
250	267 - 310	**709 390 048**	**709 390 148**	1.300
300	315 - 356	**709 390 053**	**709 390 153**	1.700
350	352 - 393	**709 390 054**	**709 390 154**	2.000
400	392 - 433	**709 390 056**	**709 390 156**	2.200
425	432 - 464	**709 390 082**	**709 390 182**	4.000
450	450 - 482	**709 390 078**	**709 390 178**	2.400
475	481 - 513	**709 390 083**	**709 390 183**	4.400
500	500 - 532	**709 390 079**	**709 390 179**	2.600
550	548 - 580	**709 390 080**	**709 390 180**	2.800
600	605 - 637	**709 390 081**	**709 390 181**	3.000

Uni/Fiks ring with Uni/Fiksers

Model:

- Consists of a segmented plastic ring and Varioseal (gasket) + Uni/Fiksers
- NBR or EPDM gasket, NBR acc. to EN 682 (-5°C up to +50°C), EPDM acc. to EN 681-1 (0°C up to +50°C)
- Restraint on all pipe materials
- For AC and GRP pipes please contact us

Note:

DN625 - DN825 sales release from Q1/2021 (for water applications)

	DN (mm)	Range (mm)	NBR Code	EPDM Code	Weight (kg)
	50	46 - 71	**709 597 230**	**709 597 630**	0.200
	65	63 - 90	**709 597 232**	**709 597 632**	3.840
	80	84 - 105	**709 597 234**	**709 597 634**	0.027
	100	104 - 132	**709 597 236**	**709 597 636**	0.036
	125	132 - 155	**709 597 238**	**709 597 638**	0.627
	150	154 - 192	**709 597 240**	**709 597 640**	0.894
	200	192 - 232	**709 597 243**	**709 597 643**	1.054
	225	230 - 268	**709 597 246**	**709 597 646**	1.300
	250	267 - 310	**709 597 248**	**709 597 648**	1.500
	300	315 - 356	**709 597 253**	**709 597 653**	1.700
	350	352 - 393	**709 597 254**	**709 597 654**	2.000
	400	392 - 433	**709 597 256**	**709 597 656**	2.200
	425	432 - 464	**709 597 282**	**709 597 682**	4.000
	450	450 - 482	**709 597 278**	**709 597 678**	2.400
	475	481 - 513	**709 597 283**	**709 597 683**	4.200
	500	500 - 532	**709 597 279**	**709 597 679**	2.600
	550	548 - 580	**709 597 280**	**709 597 680**	2.800
	600	605 - 637	**709 597 281**	**709 597 681**	3.000
NEW	625	630 - 662	**709 597 290**	**709 597 690**	10.200

table continued on the next page

	DN (mm)	Range (mm)	NBR Code	EPDM Code	Weight (kg)
NEW	675	665 - 697	**709 597 291**	**709 597 691**	11.000
NEW	700	709 - 741	**709 597 292**	**709 597 692**	11.400
NEW	800	799 - 831	**709 597 293**	**709 597 693**	12.900
NEW	825	837 - 869	**709 597 294**	**709 597 694**	13.700

Uni/Fikser set MULTI/JOINT® 3000 Plus

Model:

- For each MULTI/JOINT® 3000 Plus Uni/Fiks ring / socket, 1 set is needed
- Stainless steel A4 quality (AISI 316) Fiksers

Type	DN (mm)	Range (mm)	Fiksers (qty)	Code	Weight (kg)
A	50	46 - 71	16	**709 597 258**	0.036
A	65	63 - 90	19	**709 597 259**	0.046
A	80	84 - 105	22	**709 597 260**	0.048
B	100	104 - 132	15	**709 597 261**	0.054
B	125	132 - 155	18	**709 597 262**	0.048
C	150	154 - 192	40	**709 597 263**	0.082
C	200	192 - 232	48	**709 597 264**	0.224
D	225	230 - 267	45	**709 597 266**	0.164
D	250	267 - 310	53	**709 597 268**	0.156
D	300	315 - 356	63	**709 597 272**	0.210
D	350	352 - 393	68	**709 597 274**	0.240
D	400	392 - 433	74	**709 597 276**	0.240
D	425	432 - 464	84	**709 597 288**	0.220
D	450	450 - 482	88	**709 597 284**	0.270
D	475	481 - 513	93	**709 597 289**	0.250
D	500	500 - 532	97	**709 597 285**	0.291
D	550	548 - 580	105	**709 597 286**	0.318
D	600	605 - 637	115	**709 597 287**	0.348
E	625	630 - 662	58	**709 597 295**	0.580
E	675	665 - 697	63	**709 597 296**	0.630
E	700	709 - 741	65	**709 597 297**	0.650
E	800	799 - 831	73	**709 597 298**	0.730
E	825	837 - 869	77	**709 597 299**	0.770

Bolts set Hexagon MULTI/JOINT® 3000 Plus - A2 quality

Model:

- Set consisting of bolts, nuts and washers
- For each MULTI/JOINT® 3000 socket, 1 set is needed
- Stainless steel A2 quality (AISI 304) bolts, nuts and washers

DN (mm)	DN-DN (mm)	M	Code	Weight (kg)
	50 - 80	3xM12	**700 618 953**	0.350
100		3xM16	**700 618 954**	0.700
	125 - 150	4xM16	**700 618 955**	0.900
200		6xM16	**700 618 956**	1.200
	225 - 250	6xM20	**700 618 957**	2.000
	300 - 350	8xM20	**700 618 958**	2.600
400		10xM20	**700 618 959**	5.000
	425 - 500	10xM20	**700 618 960**	4.030
550		12xM20	**700 618 961**	4.836
600		14xM20	**700 618 962**	5.642

Bolts set hexagon MULTI/JOINT® 3000 Plus - A4 quality

Model:

- Set consisting of bolts, nuts and washers
- For each MULTI/JOINT® 3000 socket, 1 set is needed
- Stainless steel A4 quality (AISI 316) bolts, nuts and washers

DN (mm)	DN-DN (mm)	M	Code	Weight (kg)
	50 - 80	3xM12	**700 618 923**	0.350
100		3xM16	**700 618 924**	0.700
	125 - 150	4xM16	**700 618 925**	0.900
200		6xM16	**700 618 926**	1.200
	225 - 250	6xM20	**700 618 927**	2.000
	300 - 350	8xM20	**700 618 928**	2.600
400		10xM20	**700 618 929**	5.000
	425 - 500	10xM20	**700 618 933**	4.030
550		12xM20	**700 618 934**	4.836
600		14xM20	**700 618 935**	5.642
	625 - 675	14xM20	**700 618 963**	7.700
700		16xM20	**700 618 964**	8.800
	800 - 825	20xM20	**700 618 965**	11.000

RESICOAT® repair set

Model:

- To repair the coating of the fitting

Contents	Code	Weight (kg)
30cc	**709 900 000**	1.000

Ratchet spanner

Model:

- For easy nut tightening
- M12 for MULTI/JOINT® DN50, DN65 and DN80
- M16 for MULTI/JOINT® DN100, DN125 and DN150

Description	Code	Weight (kg)
17x19 mm / M12	**700 619 010**	0.360
22x24 mm / M16	**700 619 012**	0.420

Torque key wrench set

Model:

- 4 wrench keys sizes: 19, 22, 24 and 30
- 1 torque key 20-200 Nm
- robust metal case
- 4 ring spanners sizes: 19, 22, 24 and 30

Code	Weight (kg)	description
200 008 083	9.000	basic set

Adaptor set

Model:

- compatible with the torque key set
- 3 adaptors sizes: 19, 24 and 30
- 1 ratchet key 20-200 Nm

Code	description
200 008 084	adaptor set + ratchet key

ST-System Fittings

ST-System

Coupling, non restraint

Model:

- Body and clamping ring(s): steel (ST 37-2)
- Bolts and nuts: standard stainless steel A2 (AISI 304), others on request
- RESICOAT® epoxy powder coating, according to GSK standards and EN 14901
- Gaskets NBR or EPDM
- Working pressures: Water: 10 bar, 16 bar or 25 bar; Gas: 4
- Ranges: DN40 - DN80 (+2 / -1), DN100 - DN200 (+2 / -1,5), DN250 - DN500 (+4 / -3), DN600 - DN1100 (+5 / -4), DN1200 - DN1600 (+5,5 / -5)
- Angular deflection of max. 4° per socket at installation (based on the middle of the range)
- All kinds of dimensions from DN40 up to DN2200 are possible on request and different lengths and pressure classes are also possible by mentioning exact outside diameter

Installation instruction:

- For all plastic pipes, the use of an insert stiffener (see accessories) is recommended and in some cases mandatory. Check our technical information.

DN (mm)	Length (mm)	Code
40	300	**DN40C-N**
50	300	**DN50C-N**
65	300	**DN65C-N**
80	300	**DN80C-N**
100	300	**DN100C-N**
200	300	**DN200C-N**
250	300	**DN250C-N**
300	300	**DN300C-N**
350	300	**DN350C-N**
400	300	**DN400C-N**
450	300	**DN450C-N**
500	300	**DN500C-N**
550	300	**DN550C-N**
600	300	**DN600C-N**
650	300	**DN650C-N**
700	300	**DN700C-N**
800	300	**DN800C-N**
900	300	**DN900C-N**
1000	300	**DN1000C-N**
1100	300	**DN1100C-N**
1200	300	**DN1200C-N**
1300	300	**DN1300C-N**
1400	300	**DN1400C-N**
1500	300	**DN1500C-N**
1600	300	**DN1600C-N**
1700	300	**DN1700C-N**
1800	300	**DN1800C-N**
1900	300	**DN1900C-N**
2000	300	**DN2000C-N**
2100	300	**DN2100C-N**
2200	300	**DN2200C-N**

Flange Adaptor, non restraint

Model:

- Body and clamping ring(s): steel (ST 37-2)
- Bolts and nuts: standard stainless steel A2 (AISI 304), others on request
- RESICOAT® epoxy powder coating, according to GSK standards and EN 14901
- Gaskets NBR or EPDM
- Working pressures: Water: 10 bar, 16 bar or 25 bar; Gas: 4
- Ranges: DN40 - DN80 (+2 / -1), DN100 - DN200 (+2 / -1,5), DN250 - DN500 (+4 / -3), DN600 - DN1100 (+5 / -4), DN1200 - DN1600 (+5,5 / -5)
- Angular deflection of max. 4° per socket at installation (based on the middle of the range)
- All kinds of dimensions from DN40 up to DN2200 are possible on request and different lengths and pressure classes are also possible by mentioning exact outside diameter
- Flange drilling: PN10, PN16, PN25; others on request

Installation instruction:

- For all plastic pipes, the use of an insert stiffener (see accessories) is recommended and in some cases mandatory. Check our technical information.

DN (mm)	DN flange (mm)	Length (mm)	Code
40	40	300	**DN40F-N**
50	50	300	**DN50F-N**
65	65	300	**DN65F-N**
80	80	300	**DN80F-N**
100	100	300	**DN100F-N**
200	200	300	**DN200F-N**
250	250	300	**DN250F-N**
300	300	300	**DN300F-N**
350	350	300	**DN350F-N**
400	400	300	**DN400F-N**
450	450	300	**DN450F-N**
500	500	300	**DN500F-N**
550	550	300	**DN550F-N**
600	600	300	**DN600F-N**
650	650	300	**DN650F-N**
700	700	300	**DN700F-N**
800	800	300	**DN800F-N**
900	900	300	**DN900F-N**
1000	1000	300	**DN1000F-N**
1100	1100	300	**DN1100F-N**
1200	1200	300	**DN1200F-N**
1300	1300	300	**DN1300F-N**
1400	1400	300	**DN1400F-N**
1500	1500	300	**DN1500F-N**
1600	1600	300	**DN1600F-N**
1700	1700	300	**DN1700F-N**
1800	1800	300	**DN1800F-N**
1900	1900	300	**DN1900F-N**
2000	2000	300	**DN2000F-N**
2100	2100	300	**DN2100F-N**
2200	2200	300	**DN2200F-N**

Reduction Coupling, non restraint

Model:

- Body and clamping ring(s): steel (ST 37-2)
- Bolts and nuts: standard stainless steel A2 (AISI 304), others on request
- RESICOAT® epoxy powder coating, according to GSK standards and EN 14901
- Gaskets NBR or EPDM
- Working pressures: Water: 10 bar, 16 bar or 25 bar; Gas: 4
- Ranges: DN40 - DN80 (+2 / -1), DN100 - DN200 (+2 / -1,5), DN250 - DN500 (+4 / -3), DN600 - DN1100 (+5 / -4), DN1200 - DN1600 (+5,5 / -5)
- Angular deflection of max. 4° per socket at installation (based on the middle of the range)
- All kinds of dimensions from DN40 up to DN2200 are possible on request and different lengths and pressure classes are also possible by mentioning exact outside diameter

Installation instruction:

- For all plastic pipes, the use of an insert stiffener (see accessories) is recommended and in some cases mandatory. Check our technical information.

DN (mm)	Length (mm)	Code
40	300	**DN40RC-N**
50	300	**DN50RC-N**
65	300	**DN65RC-N**
80	300	**DN80RC-N**
100	300	**DN100RC-N**
200	300	**DN200RC-N**
250	300	**DN250RC-N**
300	300	**DN300RC-N**
350	300	**DN350RC-N**
400	300	**DN400RC-N**
450	300	**DN450RC-N**
500	300	**DN500RC-N**
550	300	**DN550RC-N**
600	300	**DN600RC-N**
650	300	**DN650RC-N**
700	300	**DN700RC-N**
800	300	**DN800RC-N**
900	300	**DN900RC-N**
1000	300	**DN1000RC-N**
1100	300	**DN1100RC-N**
1200	300	**DN1200RC-N**
1300	300	**DN1300RC-N**
1400	300	**DN1400RC-N**
1500	300	**DN1500RC-N**
1600	300	**DN1600RC-N**
1700	300	**DN1700RC-N**
1800	300	**DN1800RC-N**
1900	300	**DN1900RC-N**
2000	300	**DN2000RC-N**
2100	300	**DN2100RC-N**
2200	300	**DN2200RC-N**

Reduction Flange Adaptor, non restraint

Model:

- Body and clamping ring(s): steel (ST 37-2)
- Bolts and nuts: standard stainless steel A2 (AISI 304), others on request
- RESICOAT® epoxy powder coating, according to GSK standards and EN 14901
- Gaskets NBR or EPDM
- Working pressures: Water: 10 bar, 16 bar or 25 bar; Gas: 4
- Ranges: DN40 - DN80 (+2 / -1), DN100 - DN200 (+2 / -1,5), DN250 - DN500 (+4 / -3), DN600 - DN1100 (+5 / -4), DN1200 - DN1600 (+5,5 / -5)
- Angular deflection of max. 4° per socket at installation (based on the middle of the range)
- All kinds of dimensions from DN40 up to DN2200 are possible on request and different lengths and pressure classes are also possible by mentioning exact outside diameter
- Flange drilling: PN10, PN16, PN25; others on request

Installation instruction:

- For all plastic pipes, the use of an insert stiffener (see accessories) is recommended and in some cases mandatory. Check our technical information.

DN (mm)	DN flange (mm)	Length (mm)	Code
40	80 - 40	300	**DN40RF-N**
50	80 - 50	300	**DN50RF-N**
65	80 - 65	300	**DN65RF-N**
80	80 - 2200	300	**DN80RF-N**
100	80 - 2200	300	**DN100RF-N**
200	80 - 2200	300	**DN200RF-N**
250	80 - 2200	300	**DN250RF-N**
300	80 - 2200	300	**DN300RF-N**
350	80 - 2200	300	**DN350RF-N**
400	80 - 2200	300	**DN400RF-N**
450	80 - 2200	300	**DN450RF-N**
500	80 - 2200	300	**DN500RF-N**
550	80 - 2200	300	**DN550RF-N**
600	80 - 2200	300	**DN600RF-N**
650	80 - 2200	300	**DN650RF-N**
700	80 - 2200	300	**DN700RF-N**
800	80 - 2200	300	**DN800RF-N**
900	80 - 2200	300	**DN900RF-N**
1000	80 - 2200	300	**DN1000RF-N**
1100	80 - 2200	300	**DN1100RF-N**
1200	80 - 2200	300	**DN1200RF-N**
1300	80 - 2200	300	**DN1300RF-N**
1400	80 - 2200	300	**DN1400RF-N**
1500	80 - 2200	300	**DN1500RF-N**
1600	80 - 2200	300	**DN1600RF-N**
1700	80 - 2200	300	**DN1700RF-N**
1800	80 - 2200	300	**DN1800RF-N**
1900	80 - 2200	300	**DN1900RF-N**
2000	80 - 2200	300	**DN2000RF-N**
2100	80 - 2200	300	**DN2100RF-N**
2200	80 - 2200	300	**DN2200RF-N**

Multi/Clamp

Multi/Clamp

Multi/Clamp Snap length 75 mm

Model:

- All metal parts are stainless steel, quality AISI 304 (on request AISI 316)
- Lugs are made of ductile cast iron
- The rubber gasket is available in NBR (EPDM on request)
- The rubber gasket is clamped and partially covers the inside of the band
- The Multi/Clamp Snap is only suitable for above ground use
- Water and gas: NBR according to EN 682 (-10°C up to +70°C); potable water: EPDM according to EN 681-1 (-10°C up to +55°C)
- Suitable for use on steel, (ductile) cast iron and copper pipes
- For working pressures in GAS please consult Georg Fischer Waga N.V.
- To choose the correct length of Multi/Clamp check our technical information

Range (mm)	PN Water (bar)	NBR Code	Weight (kg)
15 - 22	16.0	**724 208 010**	1.000
21 - 25	16.0	**724 208 019**	0.245
26 - 30	16.0	**724 208 028**	1.000
33 - 37	16.0	**724 208 037**	1.000
37 - 41	16.0	**724 208 046**	1.000
42 - 45	16.0	**724 208 055**	0.318
48 - 51	16.0	**724 208 064**	1.000
50 - 54	16.0	**724 208 073**	1.000
55 - 58	16.0	**724 208 082**	1.000
60 - 64	16.0	**724 208 091**	0.365
62 - 66	16.0	**724 208 100**	1.000
65 - 69	16.0	**724 208 109**	1.000
69 - 73	16.0	**724 208 118**	1.000
71 - 76	16.0	**724 208 127**	1.000
74 - 80	16.0	**724 208 136**	1.000
87 - 93	16.0	**724 208 145**	0.500
94 - 100	16.0	**724 208 154**	1.000
99 - 104	16.0	**724 208 163**	1.000
105 - 111	16.0	**724 208 172**	1.000
112 - 117	10.0	**724 208 181**	1.000
115 - 121	10.0	**724 208 190**	1.000
120 - 126	10.0	**724 208 199**	1.000
126 - 131	10.0	**724 208 208**	1.000
131 - 136	10.0	**724 208 217**	1.000
139 - 145	10.0	**724 208 226**	1.000
149 - 155	10.0	**724 208 235**	1.000
156 - 162	10.0	**724 208 244**	1.000
167 - 173	10.0	**724 208 253**	1.000
173 - 179	10.0	**724 208 262**	1.000
200 - 206	10.0	**724 208 271**	1.000
217 - 223	10.0	**724 208 280**	1.000
223 - 229	10.0	**724 208 289**	1.000
272 - 278	6.0	**724 208 298**	1.000
323 - 329	6.0	**724 208 307**	1.000

Multi/Clamp Snap
length 150 mm

Model:

- All metal parts are stainless steel, quality AISI 304 (on request AISI 316)
- Lugs are made of ductile cast iron
- The rubber gasket is available in NBR (EPDM on request)
- The rubber gasket is clamped and partially covers the inside of the band
- The Multi/Clamp Snap is only suitable for above ground use
- Water and gas: NBR according to EN 682 (-10°C up to +70°C); potable water: EPDM according to EN 681-1 (-10°C up to +55°C)
- Suitable for use on steel, (ductile) cast iron and copper pipes
- For working pressures in GAS please consult Georg Fischer Waga N.V.
- To choose the correct length of Multi/Clamp check our technical information

Range (mm)	PN Water (bar)	NBR Code	Weight (kg)
15 - 22	16.0	**724 208 011**	1.000
21 - 25	16.0	**724 208 020**	1.000
26 - 30	16.0	**724 208 029**	1.000
33 - 37	16.0	**724 208 038**	1.000
37 - 41	16.0	**724 208 047**	0.613
42 - 45	16.0	**724 208 056**	1.000
48 - 51	16.0	**724 208 065**	1.000
50 - 54	16.0	**724 208 074**	0.681
55 - 58	16.0	**724 208 083**	1.000
60 - 64	16.0	**724 208 092**	1.000
62 - 66	16.0	**724 208 101**	1.000
65 - 69	16.0	**724 208 110**	1.000
69 - 73	16.0	**724 208 119**	1.000
71 - 76	16.0	**724 208 128**	1.000
74 - 80	16.0	**724 208 137**	1.000
87 - 93	16.0	**724 208 146**	1.000
94 - 100	16.0	**724 208 155**	1.000
99 - 104	16.0	**724 208 164**	1.000
105 - 111	16.0	**724 208 173**	1.000
112 - 117	10.0	**724 208 182**	1.000
115 - 121	10.0	**724 208 191**	1.000
120 - 126	10.0	**724 208 200**	1.000
126 - 131	10.0	**724 208 209**	1.000
131 - 136	10.0	**724 208 218**	1.000
139 - 145	10.0	**724 208 227**	1.000
149 - 155	10.0	**724 208 236**	1.000
156 - 162	10.0	**724 208 245**	1.000
167 - 173	10.0	**724 208 254**	1.000
173 - 179	10.0	**724 208 263**	1.000
200 - 206	10.0	**724 208 272**	1.000
217 - 223	10.0	**724 208 281**	1.000
223 - 229	10.0	**724 208 290**	1.000
272 - 278	6.0	**724 208 299**	1.000
323 - 329	6.0	**724 208 308**	1.000

Multi/Clamp Snap
length 225 mm

Model:

- All metal parts are stainless steel, quality AISI 304 (on request AISI 316)
- Lugs are made of ductile cast iron
- The rubber gasket is available in NBR (EPDM on request)
- The rubber gasket is clamped and partially covers the inside of the band
- The Multi/Clamp Snap is only suitable for above ground use
- Water and gas: NBR according to EN 682 (-10°C up to +70°C); potable water: EPDM according to EN 681-1 (-10°C up to +55°C)
- Suitable for use on steel, (ductile) cast iron and copper pipes
- For working pressures in GAS please consult Georg Fischer Waga N.V.
- To choose the correct length of Multi/Clamp check our technical information

Range (mm)	PN Water (bar)	NBR Code	Weight (kg)
15 - 22	16.0	**724 208 012**	1.000
21 - 25	16.0	**724 208 021**	1.000
26 - 30	16.0	**724 208 030**	1.000
33 - 37	16.0	**724 208 039**	1.000
37 - 41	16.0	**724 208 048**	1.000
42 - 45	16.0	**724 208 057**	1.000
48 - 51	16.0	**724 208 066**	1.000
50 - 54	16.0	**724 208 075**	1.000
55 - 58	16.0	**724 208 084**	1.000
60 - 64	16.0	**724 208 093**	1.000
62 - 66	16.0	**724 208 102**	1.000
65 - 69	16.0	**724 208 111**	1.000
69 - 73	16.0	**724 208 120**	1.000
71 - 76	16.0	**724 208 129**	1.000
74 - 80	16.0	**724 208 138**	1.000
87 - 93	16.0	**724 208 147**	1.000
94 - 100	16.0	**724 208 156**	1.000
99 - 104	16.0	**724 208 165**	1.000
105 - 111	16.0	**724 208 174**	1.000
112 - 117	10.0	**724 208 183**	1.000
115 - 121	10.0	**724 208 192**	1.000
120 - 126	10.0	**724 208 201**	1.000
126 - 131	10.0	**724 208 210**	1.000
131 - 136	10.0	**724 208 219**	1.000
139 - 145	10.0	**724 208 228**	1.000
149 - 155	10.0	**724 208 237**	1.000
156 - 162	10.0	**724 208 246**	1.000
167 - 173	10.0	**724 208 255**	1.000
173 - 179	10.0	**724 208 264**	1.000
200 - 206	10.0	**724 208 273**	1.000
217 - 223	10.0	**724 208 282**	1.000
223 - 229	10.0	**724 208 291**	1.000
272 - 278	6.0	**724 208 300**	1.000
323 - 329	6.0	**724 208 309**	1.000

Multi/Clamp Midi
length 100 mm

Model:

- Suitable for all kinds of pipe material. For use on plastic pipes please consult Georg Fischer Waga N.V.
- Single band clamp with partial gasket
- All metal parts are stainless steel, quality AISI 304 (on request AISI 316)
- The rubber gasket is available in NBR (EPDM on request)
- Water and gas: NBR according to EN 682 (-10°C up to +70°C); potable water: EPDM according to EN 681-1 (-10°C up to +55°C)
- For working pressures in GAS please consult Georg Fischer Waga N.V.
- To choose the correct length of Multi/Clamp check our technical information

Range (mm)	PN Water (bar)	NBR Code	Weight (kg)
19 - 23	16.0	**724 209 010**	1.000
25 - 29	16.0	**724 209 019**	1.000
32 - 36	16.0	**724 209 028**	1.000
38 - 42	16.0	**724 209 037**	1.000
44 - 51	16.0	**724 209 046**	1.000
48 - 55	16.0	**724 209 055**	1.000
54 - 58	16.0	**724 209 064**	1.000
60 - 64	16.0	**724 209 073**	1.000
63 - 70	16.0	**724 209 082**	1.000
67 - 74	16.0	**724 209 091**	1.000
70 - 77	16.0	**724 209 100**	1.000
73 - 80	16.0	**724 209 109**	1.000
75 - 83	16.0	**724 209 118**	1.000
82 - 90	16.0	**724 209 127**	1.000
87 - 97	16.0	**724 209 136**	1.000
95 - 104	16.0	**724 209 145**	1.000
98 - 108	16.0	**724 209 154**	1.000
102 - 112	16.0	**724 209 163**	1.000
108 - 118	16.0	**724 209 172**	1.000
113 - 123	16.0	**724 209 181**	1.000
118 - 128	16.0	**724 209 190**	1.000
120 - 131	16.0	**724 209 199**	1.000

Multi/Clamp Midi
length 150 mm

Model:

- Suitable for all kinds of pipe material. For use on plastic pipes please consult Georg Fischer Waga N.V.
- Single band clamp with partial gasket
- All metal parts are stainless steel, quality AISI 304 (on request AISI 316)
- The rubber gasket is available in NBR (EPDM on request)
- Water and gas: NBR according to EN 682 (-10°C up to +70°C); potable water: EPDM according to EN 681-1 (-10°C up to +55°C)
- For working pressures in GAS please consult Georg Fischer Waga N.V.
- To choose the correct length of Multi/Clamp check our technical information

Range (mm)	PN Water (bar)	NBR Code	Weight (kg)
54 - 58	16.0	**724 209 065**	1.000
60 - 64	16.0	**724 209 074**	1.000
63 - 70	16.0	**724 209 083**	1.000
67 - 74	16.0	**724 209 092**	1.000
70 - 77	16.0	**724 209 101**	1.000
73 - 80	16.0	**724 209 110**	1.000
75 - 83	16.0	**724 209 119**	1.000
82 - 90	16.0	**724 209 128**	1.000
87 - 97	16.0	**724 209 137**	1.000
95 - 104	16.0	**724 209 146**	1.000
98 - 108	16.0	**724 209 155**	1.000

table continued on the next page

Range (mm)	PN Water (bar)	NBR Code	Weight (kg)
102 - 112	16.0	**724 209 164**	1.000
108 - 118	16.0	**724 209 173**	1.000
113 - 123	16.0	**724 209 182**	1.000
118 - 128	16.0	**724 209 191**	1.000
120 - 131	16.0	**724 209 200**	1.000
125 - 135	16.0	**724 209 209**	1.000
133 - 144	16.0	**724 209 218**	1.000
139 - 150	16.0	**724 209 227**	1.000
145 - 155	16.0	**724 209 236**	1.000
151 - 161	16.0	**724 209 245**	1.000
159 - 170	16.0	**724 209 254**	1.000
165 - 175	16.0	**724 209 263**	1.000
168 - 180	16.0	**724 209 272**	1.000
176 - 186	10.0	**724 209 281**	1.000

Multi/Clamp Midi length 200 mm

Model:

- Suitable for all kinds of pipe material. For use on plastic pipes please consult Georg Fischer Waga N.V.
- Single band clamp with partial gasket
- All metal parts are stainless steel, quality AISI 304 (on request AISI 316)
- The rubber gasket is available in NBR (EPDM on request)
- Water and gas: NBR according to EN 682 (-10°C up to +70°C); potable water: EPDM according to EN 681-1 (-10°C up to +55°C)
- For working pressures in GAS please consult Georg Fischer Waga N.V.
- To choose the correct length of Multi/Clamp check our technical information

Range (mm)	PN Water (bar)	NBR Code	Weight (kg)
95 - 104	16.0	**724 209 147**	1.000
98 - 108	16.0	**724 209 156**	1.000
102 - 112	16.0	**724 209 165**	1.000
108 - 118	16.0	**724 209 174**	1.000
113 - 123	16.0	**724 209 183**	1.000
118 - 128	16.0	**724 209 192**	1.000
120 - 131	16.0	**724 209 201**	1.000
125 - 135	16.0	**724 209 210**	1.000
133 - 144	16.0	**724 209 219**	1.000
139 - 150	16.0	**724 209 228**	1.000
145 - 155	16.0	**724 209 237**	1.000
151 - 161	16.0	**724 209 246**	1.000
159 - 170	16.0	**724 209 255**	1.000
165 - 175	16.0	**724 209 264**	1.000
168 - 180	16.0	**724 209 273**	1.000
176 - 186	10.0	**724 209 282**	1.000
180 - 191	10.0	**724 209 291**	1.000
193 - 203	10.0	**724 209 300**	1.000
200 - 210	10.0	**724 209 309**	1.000
209 - 220	10.0	**724 209 318**	1.000

Multi/Clamp Single length 75 mm

Model:

- Suitable for all kinds of pipe material. For use on plastic pipes please consult Georg Fischer Waga N.V.
- Single band clamp with full circle gasket
- All metal parts are stainless steel, quality AISI 304 (on request AISI 316)
- The rubber gasket is available in NBR (EPDM on request)
- Water and gas: NBR according to EN 682 (-10°C up to +70°C); potable water: EPDM according to EN 681-1 (-10°C up to +55°C)
- For working pressures in GAS please consult Georg Fischer Waga N.V.

Range (mm)	PN Water (bar)	NBR Code	Weight (kg)
19 - 23	16.0	**724 211 010**	1.000
25 - 29	16.0	**724 211 026**	1.000
32 - 36	16.0	**724 211 042**	1.000
38 - 42	16.0	**724 211 058**	1.000

Multi/Clamp Single length 150 mm

Model:

- Suitable for all kinds of pipe material. For use on plastic pipes please consult Georg Fischer Waga N.V.
- Single band clamp with full circle gasket
- All metal parts are stainless steel, quality AISI 304 (on request AISI 316)
- The rubber gasket is available in NBR (EPDM on request)
- Water and gas: NBR according to EN 682 (-10°C up to +70°C); potable water: EPDM according to EN 681-1 (-10°C up to +55°C)
- For working pressures in GAS please consult Georg Fischer Waga N.V.
- To choose the correct length of Multi/Clamp check our technical information

Range (mm)	PN Water (bar)	NBR Code	Weight (kg)
19 - 23	16.0	**724 211 011**	1.000
25 - 29	16.0	**724 211 027**	1.000
32 - 36	16.0	**724 211 043**	1.000
38 - 42	16.0	**724 211 059**	1.000
44 - 51	16.0	**724 211 075**	1.000
48 - 55	16.0	**724 211 091**	1.000
52 - 59	16.0	**724 211 107**	1.000
57 - 64	16.0	**724 211 123**	1.000
60 - 67	16.0	**724 211 139**	1.000
63 - 70	16.0	**724 211 155**	1.000
67 - 74	16.0	**724 211 171**	1.000
70 - 77	16.0	**724 211 187**	1.000
73 - 80	16.0	**724 211 203**	1.000
75 - 83	16.0	**724 211 219**	1.000
82 - 90	16.0	**724 211 235**	1.000
87 - 97	16.0	**724 211 251**	1.000
95 - 104	16.0	**724 211 267**	1.000
98 - 108	16.0	**724 211 283**	1.000
102 - 112	16.0	**724 211 299**	1.000
108 - 118	16.0	**724 211 315**	1.000
113 - 123	16.0	**724 211 331**	1.000
118 - 128	16.0	**724 211 347**	1.000
120 - 131	16.0	**724 211 363**	1.000
125 - 135	16.0	**724 211 379**	1.000
133 - 144	16.0	**724 211 395**	1.000
139 - 150	16.0	**724 211 411**	1.000
145 - 155	16.0	**724 211 427**	1.000

table continued on the next page

Range (mm)	PN Water (bar)	NBR Code	Weight (kg)
151 - 161	16.0	**724 211 443**	1.000
159 - 170	16.0	**724 211 459**	1.000
165 - 175	16.0	**724 211 475**	1.000
168 - 180	16.0	**724 211 491**	1.000

Multi/Clamp Single length 200 mm

Model:

- Suitable for all kinds of pipe material. For use on plastic pipes please consult Georg Fischer Waga N.V.
- Single band clamp with full circle gasket
- All metal parts are stainless steel, quality AISI 304 (on request AISI 316)
- The rubber gasket is available in NBR (EPDM on request)
- Water and gas: NBR according to EN 682 (-10°C up to +70°C); potable water: EPDM according to EN 681-1 (-10°C up to +55°C)
- For working pressures in GAS please consult Georg Fischer Waga N.V.
- To choose the correct length of Multi/Clamp check our technical information

Range (mm)	PN Water (bar)	NBR Code	Weight (kg)
44 - 51	16.0	**724 211 076**	1.000
48 - 55	16.0	**724 211 092**	1.000
52 - 59	16.0	**724 211 108**	1.000
57 - 64	16.0	**724 211 124**	1.000
60 - 67	16.0	**724 211 140**	1.000
63 - 70	16.0	**724 211 156**	1.000
67 - 74	16.0	**724 211 172**	1.000
70 - 77	16.0	**724 211 188**	1.000
73 - 80	16.0	**724 211 204**	1.000
75 - 83	16.0	**724 211 220**	1.000
82 - 90	16.0	**724 211 236**	1.000
87 - 97	16.0	**724 211 252**	1.000
95 - 104	16.0	**724 211 268**	1.000
98 - 108	16.0	**724 211 284**	1.000
102 - 112	16.0	**724 211 300**	1.000
108 - 118	16.0	**724 211 316**	1.000
113 - 123	16.0	**724 211 332**	1.000
118 - 128	16.0	**724 211 348**	1.000
120 - 131	16.0	**724 211 364**	1.000
125 - 135	16.0	**724 211 380**	1.000
133 - 144	16.0	**724 211 396**	1.000
139 - 150	16.0	**724 211 412**	1.000
145 - 155	16.0	**724 211 428**	1.000
151 - 161	16.0	**724 211 444**	1.000
159 - 170	16.0	**724 211 460**	1.000
165 - 175	16.0	**724 211 476**	1.000
168 - 180	16.0	**724 211 492**	1.000
176 - 186	10.0	**724 211 508**	1.000
180 - 191	10.0	**724 211 524**	1.000
193 - 203	10.0	**724 211 540**	1.000
200 - 210	10.0	**724 211 556**	1.000
209 - 220	10.0	**724 211 572**	1.000
215 - 226	10.0	**724 211 588**	1.000
219 - 230	10.0	**724 211 604**	1.000
222 - 233	10.0	**724 211 620**	1.000
228 - 240	10.0	**724 211 636**	1.000
243 - 253	10.0	**724 211 652**	1.000
252 - 262	10.0	**724 211 668**	1.000
261 - 271	10.0	**724 211 684**	1.000
271 - 281	10.0	**724 211 700**	1.000
280 - 290	10.0	**724 211 716**	1.000

table continued on the next page

Range (mm)	PN Water (bar)	NBR Code	Weight (kg)
294 - 304	10.0	**724 211 732**	1.000
300 - 310	10.0	**724 211 748**	1.000
310 - 320	10.0	**724 211 764**	1.000
315 - 326	10.0	**724 211 780**	1.000
320 - 330	10.0	**724 211 796**	1.000
324 - 334	10.0	**724 211 812**	1.000
335 - 346	10.0	**724 211 828**	1.000

Multi/Clamp Single length 250 mm

Model:

- Suitable for all kinds of pipe material. For use on plastic pipes please consult Georg Fischer Waga N.V.
- Single band clamp with full circle gasket
- All metal parts are stainless steel, quality AISI 304 (on request AISI 316)
- The rubber gasket is available in NBR (EPDM on request)
- Water and gas: NBR according to EN 682 (-10°C up to +70°C); potable water: EPDM according to EN 681-1 (-10°C up to +55°C)
- For working pressures in GAS please consult Georg Fischer Waga N.V.
- To choose the correct length of Multi/Clamp check our technical information

Range (mm)	PN Water (bar)	NBR Code	Weight (kg)
60 - 67	16.0	**724 211 141**	1.000
63 - 70	16.0	**724 211 157**	1.000
67 - 74	16.0	**724 211 173**	1.000
70 - 77	16.0	**724 211 189**	1.000
73 - 80	16.0	**724 211 205**	1.000
75 - 83	16.0	**724 211 221**	1.000
82 - 90	16.0	**724 211 237**	1.000
87 - 97	16.0	**724 211 253**	1.000
95 - 104	16.0	**724 211 269**	1.000
98 - 108	16.0	**724 211 285**	1.000
102 - 112	16.0	**724 211 301**	1.000
108 - 118	16.0	**724 211 317**	1.000
113 - 123	16.0	**724 211 333**	1.000
118 - 128	16.0	**724 211 349**	1.000
120 - 131	16.0	**724 211 365**	1.000
125 - 135	16.0	**724 211 381**	1.000
133 - 144	16.0	**724 211 397**	1.000
139 - 150	16.0	**724 211 413**	1.000
145 - 155	16.0	**724 211 429**	1.000
151 - 161	16.0	**724 211 445**	1.000
159 - 170	16.0	**724 211 461**	1.000
165 - 175	16.0	**724 211 477**	1.000
168 - 180	16.0	**724 211 493**	1.000
176 - 186	10.0	**724 211 509**	1.000
180 - 191	10.0	**724 211 525**	1.000
193 - 203	10.0	**724 211 541**	1.000
200 - 210	10.0	**724 211 557**	1.000
209 - 220	10.0	**724 211 573**	1.000
215 - 226	10.0	**724 211 589**	1.000
219 - 230	10.0	**724 211 605**	1.000
222 - 233	10.0	**724 211 621**	1.000
228 - 240	10.0	**724 211 637**	1.000
243 - 253	10.0	**724 211 653**	1.000
252 - 262	10.0	**724 211 669**	1.000
261 - 271	10.0	**724 211 685**	1.000
271 - 281	10.0	**724 211 701**	1.000
280 - 290	10.0	**724 211 717**	1.000
294 - 304	10.0	**724 211 733**	1.000

table continued on the next page

Range (mm)	PN Water (bar)	NBR Code	Weight (kg)
300 - 310	10.0	**724 211 749**	1.000
310 - 320	10.0	**724 211 765**	1.000
315 - 326	10.0	**724 211 781**	1.000
320 - 330	10.0	**724 211 797**	1.000
324 - 334	10.0	**724 211 813**	1.000
335 - 346	10.0	**724 211 829**	1.000

Multi/Clamp Single length 300 mm

Model:

- Suitable for all kinds of pipe material. For use on plastic pipes please consult Georg Fischer Waga N.V.
- Single band clamp with full circle gasket
- All metal parts are stainless steel, quality AISI 304 (on request AISI 316)
- The rubber gasket is available in NBR (EPDM on request)
- Water and gas: NBR according to EN 682 (-10°C up to +70°C); potable water: EPDM according to EN 681-1 (-10°C up to +55°C)
- For working pressures in GAS please consult Georg Fischer Waga N.V.
- To choose the correct length of Multi/Clamp check our technical information

Range (mm)	PN Water (bar)	NBR Code	Weight (kg)
60 - 67	16.0	**724 211 142**	1.000
63 - 70	16.0	**724 211 158**	1.000
67 - 74	16.0	**724 211 174**	1.000
70 - 77	16.0	**724 211 190**	1.000
73 - 80	16.0	**724 211 206**	1.000
75 - 83	16.0	**724 211 222**	1.000
82 - 90	16.0	**724 211 238**	1.000
87 - 97	16.0	**724 211 254**	1.000
95 - 104	16.0	**724 211 270**	1.000
98 - 108	16.0	**724 211 286**	1.000
102 - 112	16.0	**724 211 302**	1.000
108 - 118	16.0	**724 211 318**	1.000
113 - 123	16.0	**724 211 334**	1.000
118 - 128	16.0	**724 211 350**	1.000
120 - 131	16.0	**724 211 366**	1.000
125 - 135	16.0	**724 211 382**	1.000
133 - 144	16.0	**724 211 398**	1.000
139 - 150	16.0	**724 211 414**	1.000
145 - 155	16.0	**724 211 430**	1.000
151 - 161	16.0	**724 211 446**	1.000
159 - 170	16.0	**724 211 462**	1.000
165 - 175	16.0	**724 211 478**	1.000
168 - 180	16.0	**724 211 494**	1.000
176 - 186	10.0	**724 211 510**	1.000
180 - 191	10.0	**724 211 526**	1.000
193 - 203	10.0	**724 211 542**	1.000
200 - 210	10.0	**724 211 558**	1.000
209 - 220	10.0	**724 211 574**	1.000
215 - 226	10.0	**724 211 590**	1.000
219 - 230	10.0	**724 211 606**	1.000
222 - 233	10.0	**724 211 622**	1.000
228 - 240	10.0	**724 211 638**	1.000
243 - 253	10.0	**724 211 654**	1.000
252 - 262	10.0	**724 211 670**	1.000
261 - 271	10.0	**724 211 686**	1.000
271 - 281	10.0	**724 211 702**	1.000
280 - 290	10.0	**724 211 718**	1.000
294 - 304	10.0	**724 211 734**	1.000
300 - 310	10.0	**724 211 750**	1.000

table continued on the next page

Range (mm)	PN Water (bar)	NBR Code	Weight (kg)
310 - 320	10.0	**724 211 766**	1.000
315 - 326	10.0	**724 211 782**	1.000
320 - 330	10.0	**724 211 798**	1.000
324 - 334	10.0	**724 211 814**	1.000
335 - 346	10.0	**724 211 830**	1.000

Multi/Clamp Single length 400 mm

Model:

- Suitable for all kinds of pipe material. For use on plastic pipes please consult Georg Fischer Waga N.V.
- Single band clamp with full circle gasket
- All metal parts are stainless steel, quality AISI 304 (on request AISI 316)
- The rubber gasket is available in NBR (EPDM on request)
- Water and gas: NBR according to EN 682 (-10°C up to +70°C); potable water: EPDM according to EN 681-1 (-10°C up to +55°C)
- For working pressures in GAS please consult Georg Fischer Waga N.V.
- To choose the correct length of Multi/Clamp check our technical information

Range (mm)	PN Water (bar)	NBR Code	Weight (kg)
63 - 70	16.0	**724 211 159**	1.000
67 - 74	16.0	**724 211 175**	1.000
70 - 77	16.0	**724 211 191**	1.000
73 - 80	16.0	**724 211 207**	1.000
75 - 83	16.0	**724 211 223**	1.000
82 - 90	16.0	**724 211 239**	1.000
87 - 97	16.0	**724 211 255**	1.000
95 - 104	16.0	**724 211 271**	1.000
98 - 108	16.0	**724 211 287**	1.000
102 - 112	16.0	**724 211 303**	1.000
108 - 118	16.0	**724 211 319**	1.000
113 - 123	16.0	**724 211 335**	1.000
118 - 128	16.0	**724 211 351**	1.000
120 - 131	16.0	**724 211 367**	1.000
125 - 135	16.0	**724 211 383**	1.000
133 - 144	16.0	**724 211 399**	1.000
139 - 150	16.0	**724 211 415**	1.000
145 - 155	16.0	**724 211 431**	1.000
151 - 161	16.0	**724 211 447**	1.000
159 - 170	16.0	**724 211 463**	1.000
165 - 175	16.0	**724 211 479**	1.000
168 - 180	16.0	**724 211 495**	1.000
176 - 186	10.0	**724 211 511**	1.000
180 - 191	10.0	**724 211 527**	1.000
193 - 203	10.0	**724 211 543**	1.000
200 - 210	10.0	**724 211 559**	1.000
209 - 220	10.0	**724 211 575**	1.000
215 - 226	10.0	**724 211 591**	1.000
219 - 230	10.0	**724 211 607**	1.000
222 - 233	10.0	**724 211 623**	1.000
228 - 240	10.0	**724 211 639**	1.000
243 - 253	10.0	**724 211 655**	1.000
252 - 262	10.0	**724 211 671**	1.000
261 - 271	10.0	**724 211 687**	1.000
271 - 281	10.0	**724 211 703**	1.000
280 - 290	10.0	**724 211 719**	1.000
294 - 304	10.0	**724 211 735**	1.000
300 - 310	10.0	**724 211 751**	1.000
310 - 320	10.0	**724 211 767**	1.000

table continued on the next page

Range (mm)	PN Water (bar)	NBR Code	Weight (kg)
315 - 326	10.0	**724 211 783**	1.000
320 - 330	10.0	**724 211 799**	1.000
324 - 334	10.0	**724 211 815**	1.000
335 - 346	10.0	**724 211 831**	1.000

Multi/Clamp Single length 500 mm

Model:

- Suitable for all kinds of pipe material. For use on plastic pipes please consult Georg Fischer Waga N.V.
- Single band clamp with full circle gasket
- All metal parts are stainless steel, quality AISI 304 (on request AISI 316)
- The rubber gasket is available in NBR (EPDM on request)
- Water and gas: NBR according to EN 682 (-10°C up to +70°C); potable water: EPDM according to EN 681-1 (-10°C up to +55°C)
- For working pressures in GAS please consult Georg Fischer Waga N.V.
- To choose the correct length of Multi/Clamp check our technical information

Range (mm)	PN Water (bar)	NBR Code	Weight (kg)
108 - 118	16.0	**724 211 320**	1.000
113 - 123	16.0	**724 211 336**	1.000
118 - 128	16.0	**724 211 352**	1.000
120 - 131	16.0	**724 211 368**	1.000
125 - 135	16.0	**724 211 384**	1.000
133 - 144	16.0	**724 211 400**	1.000
139 - 150	16.0	**724 211 416**	1.000
145 - 155	16.0	**724 211 432**	1.000
151 - 161	16.0	**724 211 448**	1.000
159 - 170	16.0	**724 211 464**	1.000
165 - 175	16.0	**724 211 480**	1.000
168 - 180	16.0	**724 211 496**	1.000
176 - 186	10.0	**724 211 512**	1.000
180 - 191	10.0	**724 211 528**	1.000
193 - 203	10.0	**724 211 544**	1.000
200 - 210	10.0	**724 211 560**	1.000
209 - 220	10.0	**724 211 576**	1.000
215 - 226	10.0	**724 211 592**	1.000
219 - 230	10.0	**724 211 608**	1.000
222 - 233	10.0	**724 211 624**	1.000
228 - 240	10.0	**724 211 640**	1.000
243 - 253	10.0	**724 211 656**	1.000
252 - 262	10.0	**724 211 672**	1.000
261 - 271	10.0	**724 211 688**	1.000
271 - 281	10.0	**724 211 704**	1.000
280 - 290	10.0	**724 211 720**	1.000
294 - 304	10.0	**724 211 736**	1.000
300 - 310	10.0	**724 211 752**	1.000
310 - 320	10.0	**724 211 768**	1.000
315 - 326	10.0	**724 211 784**	1.000
320 - 330	10.0	**724 211 800**	1.000
324 - 334	10.0	**724 211 816**	1.000
335 - 346	10.0	**724 211 832**	1.000

Multi/Clamp Single length 600 mm

Model:

- Suitable for all kinds of pipe material. For use on plastic pipes please consult Georg Fischer Waga N.V.
- Single band clamp with full circle gasket
- All metal parts are stainless steel, quality AISI 304 (on request AISI 316)
- The rubber gasket is available in NBR (EPDM on request)
- Water and gas: NBR according to EN 682 (-10°C up to +70°C); potable water: EPDM according to EN 681-1 (-10°C up to +55°C)
- For working pressures in GAS please consult Georg Fischer Waga N.V.
- To choose the correct length of Multi/Clamp check our technical information

Range (mm)	PN Water (bar)	NBR Code	Weight (kg)
222 - 233	10.0	**724 211 625**	1.000
228 - 240	10.0	**724 211 641**	1.000
243 - 253	10.0	**724 211 657**	1.000
252 - 262	10.0	**724 211 673**	1.000
261 - 271	10.0	**724 211 689**	1.000
271 - 281	10.0	**724 211 705**	1.000
280 - 290	10.0	**724 211 721**	1.000
294 - 304	10.0	**724 211 737**	1.000
300 - 310	10.0	**724 211 753**	1.000
310 - 320	10.0	**724 211 769**	1.000
315 - 326	10.0	**724 211 785**	1.000
320 - 330	10.0	**724 211 801**	1.000
324 - 334	10.0	**724 211 817**	1.000
335 - 346	10.0	**724 211 833**	1.000

Multi/Clamp Double length 200 mm

Model:

- Suitable for all kinds of pipe material. For use on plastic pipes please consult Georg Fischer Waga N.V.
- Double band clamp with full circle gasket
- All metal parts are stainless steel, quality AISI 304 (on request AISI 316)
- The rubber gasket is available in NBR (EPDM on request)
- Water and gas: NBR according to EN 682 (-10°C up to +70°C); potable water: EPDM according to EN 681-1 (-10°C up to +55°C)
- For working pressures in GAS please consult Georg Fischer Waga N.V.
- To choose the correct length of Multi/Clamp check our technical information

Range (mm)	PN Water (bar)	NBR Code	Weight (kg)
88 - 110	16.0	**724 212 058**	2.770
108 - 128	16.0	**724 212 074**	3.400
112 - 134	16.0	**724 212 090**	2.920
120 - 140	16.0	**724 212 106**	3.400
133 - 155	16.0	**724 212 122**	3.800
138 - 160	16.0	**724 212 138**	3.630
158 - 180	16.0	**724 212 154**	4.400
168 - 190	16.0	**724 212 170**	4.400
190 - 210	10.0	**724 212 186**	4.070
195 - 217	10.0	**724 212 202**	4.700
210 - 230	10.0	**724 212 218**	4.900
216 - 238	10.0	**724 212 234**	4.900
225 - 246	10.0	**724 212 250**	5.100
238 - 260	10.0	**724 212 266**	5.100
251 - 271	10.0	**724 212 282**	5.300

table continued on the next page

Range (mm)	PN Water (bar)	NBR Code	Weight (kg)
260 - 280	10.0	**724 212 298**	5.300
269 - 289	10.0	**724 212 314**	5.300
273 - 293	10.0	**724 212 330**	5.300
295 - 315	10.0	**724 212 346**	5.300

Multi/Clamp Double length 250 mm

Model:

- Suitable for all kinds of pipe material. For use on plastic pipes please consult Georg Fischer Waga N.V.
- Double band clamp with full circle gasket
- All metal parts are stainless steel, quality AISI 304 (on request AISI 316)
- The rubber gasket is available in NBR (EPDM on request)
- Water and gas: NBR according to EN 682 (-10°C up to +70°C); potable water: EPDM according to EN 681-1 (-10°C up to +55°C)
- For working pressures in GAS please consult Georg Fischer Waga N.V.
- To choose the correct length of Multi/Clamp check our technical information

Range (mm)	PN Water (bar)	NBR Code	Weight (kg)
88 - 110	16.0	**724 212 059**	4.500
108 - 128	16.0	**724 212 075**	4.700
112 - 134	16.0	**724 212 091**	4.700
120 - 140	16.0	**724 212 107**	4.700
133 - 155	16.0	**724 212 123**	5.200
138 - 160	16.0	**724 212 139**	5.200
158 - 180	16.0	**724 212 155**	5.120
168 - 190	16.0	**724 212 171**	6.000
190 - 210	10.0	**724 212 187**	6.400
195 - 217	10.0	**724 212 203**	6.400
210 - 230	10.0	**724 212 219**	6.600
216 - 238	10.0	**724 212 235**	6.600
225 - 246	10.0	**724 212 251**	6.900
238 - 260	10.0	**724 212 267**	6.900
251 - 271	10.0	**724 212 283**	7.200
260 - 280	10.0	**724 212 299**	7.200
269 - 289	10.0	**724 212 315**	7.200
273 - 293	10.0	**724 212 331**	7.200
295 - 315	10.0	**724 212 347**	7.200
314 - 335	10.0	**724 212 363**	7.400
322 - 344	10.0	**724 212 379**	7.400
334 - 354	10.0	**724 212 395**	7.400
340 - 360	10.0	**724 212 411**	7.400

Multi/Clamp Double length 300 mm

Model:

- Suitable for all kinds of pipe material. For use on plastic pipes please consult Georg Fischer Waga N.V.
- Double band clamp with full circle gasket
- All metal parts are stainless steel, quality AISI 304 (on request AISI 316)
- The rubber gasket is available in NBR (EPDM on request)
- Water and gas: NBR according to EN 682 (-10°C up to +70°C); potable water: EPDM according to EN 681-1 (-10°C up to +55°C)
- For working pressures in GAS please consult Georg Fischer Waga N.V.
- To choose the correct length of Multi/Clamp check our technical information

Range (mm)	PN Water (bar)	NBR Code	Weight (kg)
88 - 110	16.0	**724 212 060**	4.180
108 - 128	16.0	**724 212 076**	4.440
112 - 134	16.0	**724 212 092**	5.300
120 - 140	16.0	**724 212 108**	5.300
133 - 155	16.0	**724 212 124**	5.800
138 - 160	16.0	**724 212 140**	5.500
158 - 180	16.0	**724 212 156**	5.790
168 - 190	16.0	**724 212 172**	5.880
190 - 210	10.0	**724 212 188**	6.190
195 - 217	10.0	**724 212 204**	7.100
210 - 230	10.0	**724 212 220**	7.500
216 - 238	10.0	**724 212 236**	7.500
225 - 246	10.0	**724 212 252**	7.800
238 - 260	10.0	**724 212 268**	7.800
251 - 271	10.0	**724 212 284**	8.900
260 - 280	10.0	**724 212 300**	8.900
269 - 289	10.0	**724 212 316**	8.900
273 - 293	10.0	**724 212 332**	8.900
295 - 315	10.0	**724 212 348**	8.900
314 - 335	10.0	**724 212 364**	9.500
322 - 344	10.0	**724 212 380**	9.500
334 - 354	10.0	**724 212 396**	9.500
340 - 360	10.0	**724 212 412**	9.500
348 - 368	10.0	**724 212 428**	10.200
365 - 385	10.0	**724 212 444**	10.200
376 - 396	10.0	**724 212 460**	10.200
382 - 402	10.0	**724 212 476**	10.200
390 - 410	10.0	**724 212 492**	10.200
404 - 424	10.0	**724 212 508**	11.000
420 - 440	10.0	**724 212 524**	11.000

Multi/Clamp Double length 400 mm

Model:

- Suitable for all kinds of pipe material. For use on plastic pipes please consult Georg Fischer Waga N.V.
- Double band clamp with full circle gasket
- All metal parts are stainless steel, quality AISI 304 (on request AISI 316)
- The rubber gasket is available in NBR (EPDM on request)
- Water and gas: NBR according to EN 682 (-10°C up to +70°C); potable water: EPDM according to EN 681-1 (-10°C up to +55°C)
- For working pressures in GAS please consult Georg Fischer Waga N.V.
- To choose the correct length of Multi/Clamp check our technical information

Range (mm)	PN Water (bar)	NBR Code	Weight (kg)
88 - 110	16.0	**724 212 061**	6.600
108 - 128	16.0	**724 212 077**	6.900
112 - 134	16.0	**724 212 093**	6.900

table continued on the next page

Range (mm)	PN Water (bar)	NBR Code	Weight (kg)
120 - 140	16.0	**724 212 109**	6.900
133 - 155	16.0	**724 212 125**	7.600
138 - 160	16.0	**724 212 141**	7.600
158 - 180	16.0	**724 212 157**	8.800
168 - 190	16.0	**724 212 173**	8.800
190 - 210	10.0	**724 212 189**	9.400
195 - 217	10.0	**724 212 205**	9.400
210 - 230	10.0	**724 212 221**	9.800
216 - 238	10.0	**724 212 237**	9.800
225 - 246	10.0	**724 212 253**	10.200
238 - 260	10.0	**724 212 269**	10.200
251 - 271	10.0	**724 212 285**	11.500
260 - 280	10.0	**724 212 301**	11.500
269 - 289	10.0	**724 212 317**	11.500
273 - 293	10.0	**724 212 333**	11.500
295 - 315	10.0	**724 212 349**	11.500
314 - 335	10.0	**724 212 365**	12.300
322 - 344	10.0	**724 212 381**	12.300
334 - 354	10.0	**724 212 397**	12.300
340 - 360	10.0	**724 212 413**	12.300
348 - 368	10.0	**724 212 429**	13.200
365 - 385	10.0	**724 212 445**	13.200
376 - 396	10.0	**724 212 461**	13.200
382 - 402	10.0	**724 212 477**	13.200
390 - 410	10.0	**724 212 493**	13.200
404 - 424	10.0	**724 212 509**	14.200
420 - 440	10.0	**724 212 525**	14.200
440 - 460	10.0	**724 212 541**	14.200
457 - 477	10.0	**724 212 557**	14.800
468 - 488	10.0	**724 212 573**	14.800
488 - 508	10.0	**724 212 589**	14.800
500 - 520	10.0	**724 212 605**	15.900
520 - 540	6.0	**724 212 621**	15.900
527 - 547	6.0	**724 212 637**	15.900
545 - 565	6.0	**724 212 653**	15.900
555 - 570	6.0	**724 212 669**	15.900
568 - 588	6.0	**724 212 685**	15.900
586 - 606	6.0	**724 212 701**	15.900
600 - 620	6.0	**724 212 717**	17.700
625 - 645	6.0	**724 212 733**	17.700
650 - 670	6.0	**724 212 749**	17.700

Multi/Clamp Double length 500 mm

Model:

- Suitable for all kinds of pipe material. For use on plastic pipes please consult Georg Fischer Waga N.V.
- Double band clamp with full circle gasket
- All metal parts are stainless steel, quality AISI 304 (on request AISI 316)
- The rubber gasket is available in NBR (EPDM on request)
- Water and gas: NBR according to EN 682 (-10°C up to +70°C); potable water: EPDM according to EN 681-1 (-10°C up to +55°C)
- For working pressures in GAS please consult Georg Fischer Waga N.V.
- To choose the correct length of Multi/Clamp check our technical information

Range (mm)	PN Water (bar)	NBR Code	Weight (kg)
88 - 110	16.0	**724 212 062**	8.400
108 - 128	16.0	**724 212 078**	8.800
112 - 134	16.0	**724 212 094**	8.800
120 - 140	16.0	**724 212 110**	8.800

table continued on the next page

Range (mm)	PN Water (bar)	NBR Code	Weight (kg)
133 - 155	16.0	**724 212 126**	9.600
138 - 160	16.0	**724 212 142**	9.600
158 - 180	16.0	**724 212 158**	11.200
168 - 190	16.0	**724 212 174**	11.200
190 - 210	10.0	**724 212 190**	12.100
195 - 217	10.0	**724 212 206**	12.100
210 - 230	10.0	**724 212 222**	12.500
216 - 238	10.0	**724 212 238**	12.500
225 - 246	10.0	**724 212 254**	13.000
238 - 260	10.0	**724 212 270**	13.000
251 - 271	10.0	**724 212 286**	15.200
260 - 280	10.0	**724 212 302**	15.200
269 - 289	10.0	**724 212 318**	15.200
273 - 293	10.0	**724 212 334**	15.200
295 - 315	10.0	**724 212 350**	15.200
314 - 335	10.0	**724 212 366**	16.100
322 - 344	10.0	**724 212 382**	16.100
334 - 354	10.0	**724 212 398**	16.100
340 - 360	10.0	**724 212 414**	16.100
348 - 368	10.0	**724 212 430**	17.200
365 - 385	10.0	**724 212 446**	17.200
376 - 396	10.0	**724 212 462**	17.200
382 - 402	10.0	**724 212 478**	17.200
390 - 410	10.0	**724 212 494**	17.200
404 - 424	10.0	**724 212 510**	18.700
420 - 440	10.0	**724 212 526**	18.700
440 - 460	10.0	**724 212 542**	18.700
457 - 477	10.0	**724 212 558**	19.200
468 - 488	10.0	**724 212 574**	19.200
488 - 508	10.0	**724 212 590**	19.200
500 - 520	10.0	**724 212 606**	20.700
520 - 540	6.0	**724 212 622**	20.700
527 - 547	6.0	**724 212 638**	20.700
545 - 565	6.0	**724 212 654**	20.700
555 - 570	6.0	**724 212 670**	20.700
568 - 588	6.0	**724 212 686**	20.700
586 - 606	6.0	**724 212 702**	20.700
600 - 620	6.0	**724 212 718**	22.900
625 - 645	6.0	**724 212 734**	22.900
650 - 670	6.0	**724 212 750**	22.900

Multi/Clamp Double length 600 mm

Model:

- Suitable for all kinds of pipe material. For use on plastic pipes please consult Georg Fischer Waga N.V.
- Double band clamp with full circle gasket
- All metal parts are stainless steel, quality AISI 304 (on request AISI 316)
- The rubber gasket is available in NBR (EPDM on request)
- Water and gas: NBR according to EN 682 (-10°C up to +70°C); potable water: EPDM according to EN 681-1 (-10°C up to +55°C)
- For working pressures in GAS please consult Georg Fischer Waga N.V.
- To choose the correct length of Multi/Clamp check our technical information

Range (mm)	PN Water (bar)	NBR Code	Weight (kg)
314 - 335	10.0	**724 212 367**	19.000
322 - 344	10.0	**724 212 383**	19.000
334 - 354	10.0	**724 212 399**	19.000
340 - 360	10.0	**724 212 415**	19.000
348 - 368	10.0	**724 212 431**	20.500

table continued on the next page

Range (mm)	PN Water (bar)	NBR Code	Weight (kg)
365 - 385	10.0	**724 212 447**	20.500
376 - 396	10.0	**724 212 463**	20.500
382 - 402	10.0	**724 212 479**	20.500
390 - 410	10.0	**724 212 495**	20.500
404 - 424	10.0	**724 212 511**	21.800
420 - 440	10.0	**724 212 527**	21.800
440 - 460	10.0	**724 212 543**	21.800
457 - 477	10.0	**724 212 559**	23.000
468 - 488	10.0	**724 212 575**	23.000
488 - 508	10.0	**724 212 591**	23.000
500 - 520	10.0	**724 212 607**	24.500
520 - 540	6.0	**724 212 623**	24.500
527 - 547	6.0	**724 212 639**	24.500
545 - 565	6.0	**724 212 655**	24.500
555 - 570	6.0	**724 212 671**	24.500
568 - 588	6.0	**724 212 687**	24.500
586 - 606	6.0	**724 212 703**	24.500
600 - 620	6.0	**724 212 719**	27.200
625 - 645	6.0	**724 212 735**	27.200
650 - 670	6.0	**724 212 751**	27.200
705 - 725	4.0	**724 212 767**	19.700
730 - 750	4.0	**724 212 783**	29.200
755 - 775	4.0	**724 212 799**	29.200
805 - 825	3.0	**724 212 815**	30.500
835 - 855	3.0	**724 212 831**	31.500

Multi/Clamp Double length 750 mm

Model:

- Suitable for all kinds of pipe material. For use on plastic pipes please consult Georg Fischer Waga N.V.
- Double band clamp with full circle gasket
- All metal parts are stainless steel, quality AISI 304 (on request AISI 316)
- The rubber gasket is available in NBR (EPDM on request)
- Water and gas: NBR according to EN 682 (-10°C up to +70°C); potable water: EPDM according to EN 681-1 (-10°C up to +55°C)
- For working pressures in GAS please consult Georg Fischer Waga N.V.
- To choose the correct length of Multi/Clamp check our technical information

Range (mm)	PN Water (bar)	NBR Code	Weight (kg)
420 - 440	10.0	**724 212 528**	26.300
440 - 460	10.0	**724 212 544**	26.300
457 - 477	10.0	**724 212 560**	28.500
468 - 488	10.0	**724 212 576**	28.500
488 - 508	10.0	**724 212 592**	28.500
500 - 520	10.0	**724 212 608**	30.900
520 - 540	6.0	**724 212 624**	30.900
527 - 547	6.0	**724 212 640**	30.900
545 - 565	6.0	**724 212 656**	30.900
555 - 570	6.0	**724 212 672**	30.900
568 - 588	6.0	**724 212 688**	30.900
586 - 606	6.0	**724 212 704**	30.900
600 - 620	6.0	**724 212 720**	34.500
625 - 645	6.0	**724 212 736**	34.500
650 - 670	6.0	**724 212 752**	34.500
705 - 725	4.0	**724 212 768**	24.900

table continued on the next page

Range (mm)	PN Water (bar)	NBR Code	Weight (kg)
730 - 750	4.0	**724 212 784**	36.500
755 - 775	4.0	**724 212 800**	36.500
805 - 825	3.0	**724 212 816**	38.000
835 - 855	3.0	**724 212 832**	39.000

Multi/Clamp Triple length 300 mm

Model:

- Suitable for all kinds of pipe material. For use on plastic pipes please consult Georg Fischer Waga N.V.
- Triple band clamp with full circle gasket
- All metal parts are stainless steel, quality AISI 304 (on request AISI 316)
- The rubber gasket is available in NBR (EPDM on request)
- Water and gas: NBR according to EN 682 (-10°C up to +70°C); potable water: EPDM according to EN 681-1 (-10°C up to +55°C)
- For working pressures in GAS please consult Georg Fischer Waga N.V.
- To choose the correct length of Multi/Clamp check our technical information

Range (mm)	PN Water (bar)	NBR Code	Weight (kg)
267 - 297	10.0	**724 213 060**	1.000
300 - 330	10.0	**724 213 076**	1.000
323 - 353	10.0	**724 213 092**	1.000
352 - 382	10.0	**724 213 108**	1.000
378 - 408	10.0	**724 213 124**	1.000
402 - 432	10.0	**724 213 140**	1.000
429 - 459	10.0	**724 213 156**	1.000
456 - 486	10.0	**724 213 172**	1.000
490 - 520	10.0	**724 213 188**	1.000
520 - 550	10.0	**724 213 204**	1.000

Multi/Clamp Triple length 400 mm

Model:

- Suitable for all kinds of pipe material. For use on plastic pipes please consult Georg Fischer Waga N.V.
- Triple band clamp with full circle gasket
- All metal parts are stainless steel, quality AISI 304 (on request AISI 316)
- The rubber gasket is available in NBR (EPDM on request)
- Water and gas: NBR according to EN 682 (-10°C up to +70°C); potable water: EPDM according to EN 681-1 (-10°C up to +55°C)
- For working pressures in GAS please consult Georg Fischer Waga N.V.
- To choose the correct length of Multi/Clamp check our technical information

Range (mm)	PN Water (bar)	NBR Code	Weight (kg)
267 - 297	10.0	**724 213 061**	1.000
300 - 330	10.0	**724 213 077**	1.000
323 - 353	10.0	**724 213 093**	1.000
352 - 382	10.0	**724 213 109**	1.000
378 - 408	10.0	**724 213 125**	1.000
402 - 432	10.0	**724 213 141**	1.000
429 - 459	10.0	**724 213 157**	1.000
456 - 486	10.0	**724 213 173**	1.000
490 - 520	10.0	**724 213 189**	1.000

table continued on the next page

Range (mm)	PN Water (bar)	NBR Code	Weight (kg)
520 - 550	10.0	**724 213 205**	1.000
532 - 562	6.0	**724 213 221**	1.000
545 - 575	6.0	**724 213 237**	1.000
570 - 600	6.0	**724 213 253**	1.000

Multi/Clamp Triple length 500 mm

Model:

- Suitable for all kinds of pipe material. For use on plastic pipes please consult Georg Fischer Waga N.V.
- Triple band clamp with full circle gasket
- All metal parts are stainless steel, quality AISI 304 (on request AISI 316)
- The rubber gasket is available in NBR (EPDM on request)
- Water and gas: NBR according to EN 682 (-10°C up to +70°C); potable water: EPDM according to EN 681-1 (-10°C up to +55°C)
- For working pressures in GAS please consult Georg Fischer Waga N.V.
- To choose the correct length of Multi/Clamp check our technical information

Range (mm)	PN Water (bar)	NBR Code	Weight (kg)
352 - 382	10.0	**724 213 110**	1.000
378 - 408	10.0	**724 213 126**	1.000
402 - 432	10.0	**724 213 142**	1.000
429 - 459	10.0	**724 213 158**	1.000
456 - 486	10.0	**724 213 174**	1.000
490 - 520	10.0	**724 213 190**	1.000
520 - 550	10.0	**724 213 206**	29.000
532 - 562	6.0	**724 213 222**	1.000
545 - 575	6.0	**724 213 238**	1.000
570 - 600	6.0	**724 213 254**	1.000
586 - 616	6.0	**724 213 270**	1.000
609 - 639	6.0	**724 213 286**	1.000
615 - 645	6.0	**724 213 302**	1.000
633 - 663	4.0	**724 213 318**	1.000
640 - 670	4.0	**724 213 334**	1.000
654 - 684	4.0	**724 213 350**	1.000

Multi/Clamp Triple length 600 mm

Model:

- Suitable for all kinds of pipe material. For use on plastic pipes please consult Georg Fischer Waga N.V.
- Triple band clamp with full circle gasket
- All metal parts are stainless steel, quality AISI 304 (on request AISI 316)
- The rubber gasket is available in NBR (EPDM on request)
- Water and gas: NBR according to EN 682 (-10°C up to +70°C); potable water: EPDM according to EN 681-1 (-10°C up to +55°C)
- For working pressures in GAS please consult Georg Fischer Waga N.V.
- To choose the correct length of Multi/Clamp check our technical information

Range (mm)	PN Water (bar)	NBR Code	Weight (kg)
456 - 486	10.0	**724 213 175**	1.000
490 - 520	10.0	**724 213 191**	1.000
520 - 550	10.0	**724 213 207**	1.000
532 - 562	6.0	**724 213 223**	1.000
545 - 575	6.0	**724 213 239**	1.000
570 - 600	6.0	**724 213 255**	1.000
586 - 616	6.0	**724 213 271**	1.000

table continued on the next page

Range (mm)	PN Water (bar)	NBR Code	Weight (kg)
609 - 639	6.0	**724 213 287**	1.000
615 - 645	6.0	**724 213 303**	1.000
633 - 663	4.0	**724 213 319**	1.000
640 - 670	4.0	**724 213 335**	1.000
654 - 684	4.0	**724 213 351**	1.000
670 - 700	4.0	**724 213 367**	1.000
702 - 732	4.0	**724 213 383**	1.000
711 - 741	4.0	**724 213 399**	1.000
729 - 759	4.0	**724 213 415**	1.000
747 - 777	4.0	**724 213 431**	1.000
780 - 815	4.0	**724 213 447**	1.000
800 - 830	4.0	**724 213 463**	1.000
813 - 843	3.0	**724 213 479**	1.000
830 - 860	3.0	**724 213 495**	1.000
852 - 882	2.0	**724 213 511**	1.000
864 - 894	2.0	**724 213 527**	1.000
900 - 930	2.0	**724 213 543**	1.000
925 - 955	2.0	**724 213 559**	1.000
945 - 975	2.0	**724 213 575**	1.000
970 - 1000	2.0	**724 213 591**	1.000

Multi/Clamp Triple length 750 mm

Model:

- Suitable for all kinds of pipe material. For use on plastic pipes please consult Georg Fischer Waga N.V.
- Triple band clamp with full circle gasket
- All metal parts are stainless steel, quality AISI 304 (on request AISI 316)
- The rubber gasket is available in NBR (EPDM on request)
- Water and gas: NBR according to EN 682 (-10°C up to +70°C); potable water: EPDM according to EN 681-1 (-10°C up to +55°C)
- For working pressures in GAS please consult Georg Fischer Waga N.V.
- To choose the correct length of Multi/Clamp check our technical information

Range (mm)	PN Water (bar)	NBR Code	Weight (kg)
545 - 575	6.0	**724 213 240**	1.000
570 - 600	6.0	**724 213 256**	1.000
586 - 616	6.0	**724 213 272**	1.000
609 - 639	6.0	**724 213 288**	1.000
615 - 645	6.0	**724 213 304**	1.000
633 - 663	4.0	**724 213 320**	1.000
640 - 670	4.0	**724 213 336**	1.000
654 - 684	4.0	**724 213 352**	1.000
670 - 700	4.0	**724 213 368**	1.000
702 - 732	4.0	**724 213 384**	48.000
711 - 741	4.0	**724 213 400**	1.000
729 - 759	4.0	**724 213 416**	1.000
747 - 777	4.0	**724 213 432**	1.000
780 - 815	4.0	**724 213 448**	1.000
800 - 830	4.0	**724 213 464**	1.000
813 - 843	3.0	**724 213 480**	1.000
830 - 860	3.0	**724 213 496**	1.000
852 - 882	2.0	**724 213 512**	1.000
864 - 894	2.0	**724 213 528**	1.000
900 - 930	2.0	**724 213 544**	1.000
925 - 955	2.0	**724 213 560**	1.000
945 - 975	2.0	**724 213 576**	1.000
970 - 1000	2.0	**724 213 592**	1.000

Multi/Clamp Thread (surcharge)

Model:

- Suitable for all kinds of pipe material. For use on plastic pipes please consult Georg Fischer Waga N.V.
- The Multi/Clamp single, double and triple can be equipped with a threaded outlet
- To obtain the total product price please take the surcharge for the threaded outlet and the price of the repair clamp
- All metal parts are stainless steel, quality AISI 304 (on request AISI 316)
- Female threaded outlet (other threads or combinations on request)
- For working pressures in GAS please consult Georg Fischer Waga N.V.
- To choose the correct length of Multi/Clamp check our technical information

Size (inch)	min. pipe OD	Length	Code
½	from 48 mm	min. length 150 mm	**thread1/2**
¾	from 48 mm	min. length 150 mm	**thread3/4**
1	from 54 mm	min. length 150 mm	**thread1**
1 ¼	from 76 mm	min. length 150 mm	**thread1.1/4**
1 ½	from 82 mm	min. length 200 mm	**thread1.1/2**
2	from 87 mm	min. length 200 mm	**thread2**
2 ½	from 110 mm	min. length 200 mm	**thread2.1/2**
3	from 130 mm	min. length 300 mm	**thread3**
4	from 155 mm	min. length 400 mm	**thread4**

Multi/Clamp Saddle Studs threaded outlet 1/2

Model:

- Saddle with threaded outlet
- All metal parts are stainless steel, quality AISI 304 (on request AISI 316)
- The rubber gasket is available in NBR (EPDM on request)
- Outlet dimension up to 4" available on request
- Lower shell half is without gasket (available on request)
- Other sizes available on request
- Not suitable for the use on plastic pipes
- Water and gas: NBR according to EN 682 (-10°C up to +70°C); potable water: EPDM according to EN 681-1 (-10°C up to +55°C)
- For working pressures in GAS please consult Georg Fischer Waga N.V.

Range (mm)	PN Water (bar)	NBR Code
68 - 78	16.0	**724 201 061**
88 - 110	16.0	**724 201 073**
108 - 134	16.0	**724 201 097**
133 - 155	16.0	**724 201 133**
159 - 181	16.0	**724 201 169**
168 - 190	16.0	**724 201 193**
190 - 212	16.0	**724 201 205**
216 - 238	16.0	**724 201 217**
238 - 260	16.0	**724 201 241**
267 - 289	16.0	**724 201 253**

Multi/Clamp Saddle Studs threaded outlet 3/4

Model:

- Saddle with threaded outlet
- All metal parts are stainless steel, quality AISI 304 (on request AISI 316)
- The rubber gasket is available in NBR (EPDM on request)
- Outlet dimension up to 4" available on request
- Lower shell half is without gasket (available on request)
- Other sizes available on request
- Not suitable for the use on plastic pipes
- Water and gas: NBR according to EN 682 (-10°C up to +70°C); potable water: EPDM according to EN 681-1 (-10°C up to +55°C)
- For working pressures in GAS please consult Georg Fischer Waga N.V.

Range (mm)	PN Water (bar)	NBR Code
68 - 78	16.0	**724 201 062**
88 - 110	16.0	**724 201 074**
108 - 134	16.0	**724 201 098**
133 - 155	16.0	**724 201 134**
159 - 181	16.0	**724 201 170**
168 - 190	16.0	**724 201 194**
190 - 212	16.0	**724 201 206**
216 - 238	16.0	**724 201 218**
238 - 260	16.0	**724 201 242**
267 - 289	16.0	**724 201 254**

Multi/Clamp Saddle Studs threaded outlet 1

Model:

- Saddle with threaded outlet
- All metal parts are stainless steel, quality AISI 304 (on request AISI 316)
- The rubber gasket is available in NBR (EPDM on request)
- Outlet dimension up to 4" available on request
- Lower shell half is without gasket (available on request)
- Other sizes available on request
- Not suitable for the use on plastic pipes
- Water and gas: NBR according to EN 682 (-10°C up to +70°C); potable water: EPDM according to EN 681-1 (-10°C up to +55°C)
- For working pressures in GAS please consult Georg Fischer Waga N.V.

Range (mm)	PN Water (bar)	NBR Code
68 - 78	16.0	**724 201 063**
88 - 110	16.0	**724 201 075**
108 - 134	16.0	**724 201 099**
133 - 155	16.0	**724 201 135**
159 - 181	16.0	**724 201 171**
168 - 190	16.0	**724 201 195**
190 - 212	16.0	**724 201 207**
216 - 238	16.0	**724 201 219**
238 - 260	16.0	**724 201 243**
267 - 289	16.0	**724 201 255**

Multi/Clamp Saddle Studs threaded outlet 1 1/4

Model:

- Saddle with threaded outlet
- All metal parts are stainless steel, quality AISI 304 (on request AISI 316)
- The rubber gasket is available in NBR (EPDM on request)
- Outlet dimension up to 4" available on request
- Lower shell half is without gasket (available on request)
- Other sizes available on request
- Not suitable for the use on plastic pipes
- Water and gas: NBR according to EN 682 (-10°C up to +70°C); potable water: EPDM according to EN 681-1 (-10°C up to +55°C)
- For working pressures in GAS please consult Georg Fischer Waga N.V.

Range (mm)	PN Water (bar)	NBR Code
88 - 110	16.0	**724 201 076**
108 - 134	16.0	**724 201 100**
133 - 155	16.0	**724 201 136**
159 - 181	16.0	**724 201 172**
168 - 190	16.0	**724 201 196**
190 - 212	16.0	**724 201 208**
216 - 238	16.0	**724 201 220**
238 - 260	16.0	**724 201 244**
267 - 289	16.0	**724 201 256**

Multi/Clamp Saddle Studs threaded outlet 1 1/2

Model:

- Saddle with threaded outlet
- All metal parts are stainless steel, quality AISI 304 (on request AISI 316)
- The rubber gasket is available in NBR (EPDM on request)
- Outlet dimension up to 4" available on request
- Lower shell half is without gasket (available on request)
- Other sizes available on request
- Not suitable for the use on plastic pipes
- Water and gas: NBR according to EN 682 (-10°C up to +70°C); potable water: EPDM according to EN 681-1 (-10°C up to +55°C)
- For working pressures in GAS please consult Georg Fischer Waga N.V.

Range (mm)	PN Water (bar)	NBR Code
108 - 134	16.0	**724 201 101**
133 - 155	16.0	**724 201 137**
159 - 181	16.0	**724 201 173**
168 - 190	16.0	**724 201 197**
190 - 212	16.0	**724 201 209**
216 - 238	16.0	**724 201 221**
238 - 260	16.0	**724 201 245**
267 - 289	16.0	**724 201 257**

Multi/Clamp Saddle Studs threaded outlet 2

Model:

- Saddle with threaded outlet
- All metal parts are stainless steel, quality AISI 304 (on request AISI 316)
- The rubber gasket is available in NBR (EPDM on request)
- Outlet dimension up to 4" available on request
- Lower shell half is without gasket (available on request)
- Other sizes available on request
- Not suitable for the use on plastic pipes
- Water and gas: NBR according to EN 682 (-10°C up to +70°C); potable water: EPDM according to EN 681-1 (-10°C up to +55°C)
- For working pressures in GAS please consult Georg Fischer Waga N.V.

Range (mm)	PN Water (bar)	NBR Code
108 - 134	16.0	**724 201 102**
133 - 155	16.0	**724 201 138**
159 - 181	16.0	**724 201 174**
168 - 190	16.0	**724 201 198**
190 - 212	16.0	**724 201 210**
216 - 238	16.0	**724 201 222**
238 - 260	16.0	**724 201 246**
267 - 289	16.0	**724 201 258**

Multi/Clamp Flange (tapping sleeve) length 300 mm

Model:

- Suitable for all kinds of pipe material. For use on plastic pipes please consult Georg Fischer Waga N.V.
- Double band saddle with flanged outlet
- Full circle construction for optimal pipe support
- To obtain the total product price, please take the price of the tapping sleeve and add the price for the flange outlet
- All metal parts are stainless steel, quality AISI 304 (on request AISI 316)
- The rubber gasket is available in NBR (EPDM on request)
- Water and gas: NBR according to EN 682 (-10°C up to +70°C); potable water: EPDM according to EN 681-1 (-10°C up to +55°C)
- For working pressures in GAS please consult Georg Fischer Waga N.V.
- To choose the correct length of Multi/Clamp check our technical information

Range (mm)	DN (mm)	PN Water (bar)	NBR Code
95 - 104		16.0	**95-104L300N**
98 - 108		16.0	**98-108L300N**
108 - 128		16.0	**108-128L300N**
118 - 138		16.0	**118-138L300N**
133 - 153		16.0	**133-153L300N**
143 - 163		16.0	**143-163L300N**
160 - 180		16.0	**160-180L300N**
180 - 200		16.0	**180-200L300N**
190 - 210		16.0	**190-210L300N**
210 - 230		16.0	**210-230L300N**
230 - 250		16.0	**230-250L300N**
240 - 260		16.0	**240-260L300N**
250 - 270		16.0	**250-270L300N**
270 - 290		16.0	**270-290L300N**
290 - 310		16.0	**290-310L300N**
315 - 335		16.0	**315-335L300N**
335 - 355		16.0	**335-355L300N**
-	350	16.0	**DN350L300N**

Multi/Clamp Flange (tapping sleeve) length 400 mm

Model:

- Suitable for all kinds of pipe material. For use on plastic pipes please consult Georg Fischer Waga N.V.
- Double band saddle with flanged outlet
- Full circle construction for optimal pipe support
- To obtain the total product price, please take the price of the tapping sleeve and add the price for the flange outlet
- All metal parts are stainless steel, quality AISI 304 (on request AISI 316)
- The rubber gasket is available in NBR (EPDM on request)
- Water and gas: NBR according to EN 682 (-10°C up to +70°C); potable water: EPDM according to EN 681-1 (-10°C up to +55°C)
- For working pressures in GAS please consult Georg Fischer Waga N.V.
- To choose the correct length of Multi/Clamp check our technical information

Range (mm)	DN (mm)	PN Water (bar)	NBR Code
95 - 104		16.0	**95-104L400N**
98 - 108		16.0	**98-108L400N**
108 - 128		16.0	**108-128L400N**
118 - 138		16.0	**118-138L400N**
133 - 153		16.0	**133-153L400N**
143 - 163		16.0	**143-163L400N**
160 - 180		16.0	**160-180L400N**
180 - 200		16.0	**180-200L400N**
190 - 210		16.0	**190-210L400N**
210 - 230		16.0	**210-230L400N**
230 - 250		16.0	**230-250L400N**
240 - 260		16.0	**240-260L400N**
250 - 270		16.0	**250-270L400N**
270 - 290		16.0	**270-290L400N**
290 - 310		16.0	**290-310L400N**
315 - 335		16.0	**315-335L400N**
335 - 355		16.0	**335-355L400N**
-	350	16.0	**DN350L400N**
-	400	16.0	**DN400L400N**
-	450	16.0	**DN450L400N**
-	500	16.0	**DN500L400N**
-	600	10.0	**DN600L400N**
-	700		**DN700L400N**

Multi/Clamp Flange (tapping sleeve) length 500 mm

Model:

- Suitable for all kinds of pipe material. For use on plastic pipes please consult Georg Fischer Waga N.V.
- Double band saddle with flanged outlet
- Full circle construction for optimal pipe support
- To obtain the total product price, please take the price of the tapping sleeve and add the price for the flange outlet
- All metal parts are stainless steel, quality AISI 304 (on request AISI 316)
- The rubber gasket is available in NBR (EPDM on request)
- Water and gas: NBR according to EN 682 (-10°C up to +70°C); potable water: EPDM according to EN 681-1 (-10°C up to +55°C)
- For working pressures in GAS please consult Georg Fischer Waga N.V.
- To choose the correct length of Multi/Clamp check our technical information

Range (mm)	DN (mm)	PN Water (bar)	NBR Code
95 - 104		16.0	**95-104L500N**
98 - 108		16.0	**98-108L500N**
108 - 128		16.0	**108-128L500N**
118 - 138		16.0	**118-138L500N**

table continued on the next page

Range (mm)	DN (mm)	PN Water (bar)	NBR Code
133 - 153		16.0	**133-153L500N**
143 - 163		16.0	**143-163L500N**
160 - 180		16.0	**160-180L500N**
180 - 200		16.0	**180-200L500N**
190 - 210		16.0	**190-210L500N**
210 - 230		16.0	**210-230L500N**
230 - 250		16.0	**230-250L500N**
240 - 260		16.0	**240-260L500N**
250 - 270		16.0	**250-270L500N**
270 - 290		16.0	**270-290L500N**
290 - 310		16.0	**290-310L500N**
315 - 335		16.0	**315-335L500N**
335 - 355		16.0	**335-355L500N**
-	350	16.0	**DN350L500N**
-	400	16.0	**DN400L500N**
-	450	16.0	**DN450L500N**
-	500	16.0	**DN500L500N**
-	600	10.0	**DN600L500N**
-	700		**DN700L500N**
-	750		**DN750L500N**
-	800		**DN800L500N**

Multi/Clamp Flange (tapping sleeve) length 600 mm

Model:

- Suitable for all kinds of pipe material. For use on plastic pipes please consult Georg Fischer Waga N.V.
- Double band saddle with flanged outlet
- Full circle construction for optimal pipe support
- To obtain the total product price, please take the price of the tapping sleeve and add the price for the flange outlet
- All metal parts are stainless steel, quality AISI 304 (on request AISI 316)
- The rubber gasket is available in NBR (EPDM on request)
- Water and gas: NBR according to EN 682 (-10°C up to +70°C); potable water: EPDM according to EN 681-1 (-10°C up to +55°C)
- For working pressures in GAS please consult Georg Fischer Waga N.V.
- To choose the correct length of Multi/Clamp check our technical information

Range (mm)	DN (mm)	PN Water (bar)	NBR Code
315 - 335		16.0	**315-335L600N**
335 - 355		16.0	**335-355L600N**
-	350	16.0	**DN350L600N**
-	400	16.0	**DN400L600N**
-	450	16.0	**DN450L600N**
-	500	16.0	**DN500L600N**
-	600	10.0	**DN600L600N**
-	700		**DN700L600N**
-	750		**DN750L600N**
-	800		**DN800L600N**

Multi/Clamp Flange (tapping sleeve) length 750 mm

Model:

- Suitable for all kinds of pipe material. For use on plastic pipes please consult Georg Fischer Waga N.V.
- Double band saddle with flanged outlet
- Full circle construction for optimal pipe support
- To obtain the total product price, please take the price of the tapping sleeve and add the price for the flange outlet
- All metal parts are stainless steel, quality AISI 304 (on request AISI 316)
- The rubber gasket is available in NBR (EPDM on request)
- Water and gas: NBR according to EN 682 (-10°C up to +70°C); potable water: EPDM according to EN 681-1 (-10°C up to +55°C)
- For working pressures in GAS please consult Georg Fischer Waga N.V.
- To choose the correct length of Multi/Clamp check our technical information

DN (mm)	PN Water (bar)	NBR Code
400	16.0	**DN400L750N**
450	16.0	**DN450L750N**
500	16.0	**DN500L750N**
600	10.0	**DN600L750N**
700		**DN700L750N**
750		**DN750L750N**
800		**DN800L750N**

Multi/Clamp Flange (flange outlet)

Model:

- To obtain the total product price please add the price of the tapping sleeve
- All metal parts are stainless steel, quality AISI 304 (on request AISI 316)
- To choose the correct length of Multi/Clamp check our technical information

DN (mm)	Drilling pattern	required body length	Total height of the branch and flange (mm)	Code
50	PN 10/16	300 mm	80	**flangeDN50**
65	PN 10/16	300 mm	80	**flangeDN65**
80	PN 10/16	300 mm (400 mm if pipe OD > 300)	100	**flangeDN80**
100	PN 10/16	400 mm	100	**flangeDN100**
125	PN 10/16	400 mm	120	**flangeDN125**
150	PN 10/16	400 mm	130	**flangeDN150**
200	PN 10	500 mm	140	**flangeDN200**
250	PN 10	600 mm	165	**flangeDN250**
300	PN 10	750 mm	165	**flangeDN300**

Multi/Clamp Combi Box
length 400 mm

Model:

- Suitable for all kinds of pipe material. For use on plastic pipes please consult Georg Fischer Waga N.V.
- A combination of either two or more shell sections enables you to repair pipes from OD 91 mm up to OD 1146 mm
- All metal parts are stainless steel, quality AISI 304 (on request AISI 316)
- The rubber gasket is available in NBR (EPDM on request)
- Water and gas: NBR according to EN 682 (-10°C up to +70°C); potable water: EPDM according to EN 681-1 (-10°C up to +55°C)
- For working pressures in GAS please consult Georg Fischer Waga N.V.

Description	NBR Code	Weight (kg)	EPDM Code
Repair set complete (all shell sections + wooden box)	**724 213 730**	35.000	**724 233 730**
Shell section A	**724 213 746**	1.000	**724 233 746**
Shell section B	**724 213 762**	5.234	**724 233 762**
Shell section C	**724 213 778**	5.572	**724 233 778**
Shell section D	**724 213 794**	6.150	**724 233 794**
Shell section E	**724 213 810**	6.704	**724 233 810**
Wooden box seperate	**724 213 826**	1.000	

Range [mm]	description	PN water [bar]
91 - 98	A	16
111 - 121	B	16
131 - 141	C	16
162 - 172	D	16
193 - 203	E	16
	Shell sections to combine with 1 Multi/Clamp Combi Box:	
213 - 233	A B	16
233 - 253	A C	16
253 - 273	B C	10
264 - 284	A D	10
284 - 304	B D	10
295 - 315	A E	10
304 - 324	C D	10
314 - 334	B E	10
335 - 355	C E	10
354 - 384	A B C	10
386 - 416	A B D	10
406 - 436	A C D	10
416 - 446	A B E	10
426 - 456	B C D	10
436 - 466	A C E	10
456 - 486	B C E	10
467 - 497	A D E	10
487 - 517	B D E	10
508 - 538	C D E	10
527 - 567	A B C D	6
558 - 598	A B C E	6
589 - 629	A B D E	6
609 - 649	A C D E	4
629 - 669	B C D E	4
730 - 780	A B C D E	2
	Shell sections to combine with 2 Multi/Clamp Combi Boxes:	
661 - 701	B D D E	2
720 - 770	E E B A A	2
761 - 811	E E C B A	2
833 - 883	E E D C B	2
853 - 903	E E D C C	2
934 - 994	E E D C B A	2
965 - 1025	E E D D B A	1
1026 - 1086	E E D D C C	1
1076 - 1146	E E D C C B A	1

W400/W410 drilling devices

W400 drilling device (3/4" - 2")

Basic Drilling Device W400
including ratchet and drill shaft 620 mm (accessories to be added)

Model:

- Including: hex key 3 mm, hex key 6 mm and screwdriver

Description	Code	Weight (kg)
basic device including ratchet and drill shaft	**709 700 000**	8.000

Male threaded adaptors for W400 drilling device

Model:

- Suitable to connect to saddles

Description	Code	Weight (kg)
male threaded adaptor 3/4	**709 702 257**	1.440
male threaded adaptor 1	**709 702 258**	1.720
male threaded adaptor 1 1/4	**709 702 259**	1.760
male threaded adaptor 1 1/2	**709 702 260**	1.800
male threaded adaptor 2	**709 702 261**	1.440

Mandrel combined with pilot drill

Model:

- mandrel including special pilot drill 6mm with dual retention wires

Description	Code	Weight (kg)
hole saw mandrel 9/16 inch - 1 3/16 inch with retain pilot drill	**709 701 260**	1.000
hole saw mandrel 1 1/4 inch - 6 inch with retain pilot drill	**709 701 261**	1.000

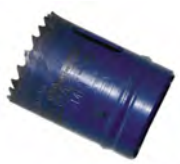

Cup drill HSS

Model:

- Suitable for steel and (ductile) cast iron

Inch (inch)	Description	Code	Weight (kg)
11/16	HSS bi-metal cutter 17,5 mm	**709 810 511**	0.300
3/4	HSS bi-metal cutter 19,1 mm	**709 810 512**	0.300
7/8	HSS bi-metal cutter 22,2 mm	**709 810 514**	0.300
15/16	HSS bi-metal cutter 23,8 mm	**709 810 515**	0.300
1	HSS bi-metal cutter 25,4 mm	**709 810 516**	0.300
1 1/8	HSS bi-metal cutter 28,6 mm	**709 810 518**	0.300
1 3/16	HSS bi-metal cutter 30,2 mm	**709 810 519**	0.300
1 1/4	HSS bi-metal cutter 31,8 mm	**709 810 520**	0.300
1 3/8	HSS bi-metal cutter 34,9 mm	**709 810 522**	0.300

table continued on the next page

Inch (inch)	Description	Code	Weight (kg)
1 7/16	HSS bi-metal cutter 36,5 mm	**709 810 523**	0.300
1 1/2	HSS bi-metal cutter 38,1 mm	**709 810 524**	0.300
1 3/4	HSS bi-metal cutter 44,5 mm	**709 810 528**	0.300
2	HSS bi-metal cutter 50,8 mm	**709 810 532**	0.300

Cup drill HSS carbide tipped

Model:

- Suitable for abrasive materials such as asbestos cement and cement lined (ductile) iron pipes

Inch (inch)	Description	Code	Weight (kg)
3/4	carbide tipped HSS bi-metal cutter 19,1 mm	**709 810 612**	0.300
7/8	carbide tipped HSS bi-metal cutter 22,2 mm	**709 810 614**	0.300
1	carbide tipped HSS bi-metal cutter 25,4 mm	**709 810 616**	0.300
1 1/8	carbide tipped HSS bi-metal cutter 28,6 mm	**709 810 618**	0.300
1 1/4	carbide tipped HSS bi-metal cutter 31,8 mm	**709 810 620**	0.300
1 3/8	carbide tipped HSS bi-metal cutter 34,9 mm	**709 810 622**	0.300
1 1/2	carbide tipped HSS bi-metal cutter 38,1 mm	**709 810 624**	0.300
1 3/4	carbide tipped HSS bi-metal cutter 44,5 mm	**709 810 628**	0.300
2	carbide tipped HSS bi-metal cutter 50,8 mm	**709 810 632**	0.300

Pilot drill

Model:

- pilot drill 6 mm with dual retention wires

Description	Code	Weight (kg)
pilot drill 6 mm with dual retention wires	**709 800 006**	0.010

Cup drill
PRO-FIT (other sizes on request)

Model:

- Suitable for PE and PVC pipes

Inch (inch)	Description	Code	Weight (kg)
11/16	PRO-FIT PE/PVC cutter 17,5 mm	**709 810 711**	0.030
3/4	PRO-FIT PE/PVC cutter 19,1 mm	**709 810 712**	0.034
7/8	PRO-FIT PE/PVC cutter 22,2 mm	**709 810 714**	0.046
1	PRO-FIT PE/PVC cutter 25,4 mm	**709 810 716**	0.056
1 1/4	PRO-FIT PE/PVC cutter 31,8 mm	**709 810 720**	0.096
1 1/2	PRO-FIT PE/PVC cutter 38,1 mm	**709 810 724**	0.104
1 3/4	PRO-FIT PE/PVC cutter 44,5 mm	**709 810 728**	0.120
1 7/8	PRO-FIT PE/PVC cutter 48,2 mm	**709 810 730**	0.128

Heavy duty transport / storage box for W400 drilling device

Model:

- Outside dimension transport case: 80 x 40 x 20 cm

Description	Code	Weight (kg)
Heavy duty transport / storage box for W400 drilling device	**709 706 416**	8.100

W410 drilling device (3/4" - 8")

Basic Drilling Device W410 including ratchet (all accessories to be added)

Model:

- Including: hex key 3 mm, hex key 6 mm and screwdriver

Description	Code	Weight (kg)
basic device including ratchet	**709 700 100**	7.800

Drill shafts

Model:

- Drill shafts to be selected depending on build up length of your configuration

Description	Code	Weight (kg)
drill shaft 620 mm	**709 700 010**	1.200
drill shaft 775 mm	**709 700 021**	1.500
drill shaft 1070 mm	**709 700 023**	2.070

Mandrel combined with pilot drill

Model:

- mandrel including special pilot drill 6mm with dual retention wires

Description	Code	Weight (kg)
hole saw mandrel 9/16 inch - 1 3/16 inch with retain pilot drill	**709 701 260**	1.000
hole saw mandrel 1 1/4 inch - 6 inch with retain pilot drill	**709 701 261**	1.000

Flange adaptors

Model:

- Suitable for flange to flange connections
- Not included flange bolts / gasket
- Flange adaptor for W410
- Suitable for MULTI/JOINT® flange adaptor / connection to PE spigot

Description	Drilling pattern	Code	Weight (kg)
flange adaptor DN50	PN16	**709 702 045**	1.850
flange adaptor DN65	PN16	**709 702 046**	2.250
flange adaptor DN80	PN16	**709 702 047**	3.090
flange adaptor DN100	PN16	**709 702 048**	3.840
flange adaptor DN150	PN16	**709 702 050**	6.530
flange adaptor DN200	PN10	**709 702 051**	8.800

Pilot drill

Model:

- pilot drill 6 mm with dual retention wires

Description	Code	Weight (kg)
pilot drill 6 mm with dual retention wires	**709 800 006**	0.010

Cup drill
PE chipless Ø45, Ø60, Ø63, Ø80 and Ø84 mm

Model:

- Maximum PE pipe d630 SDR11
- Suitable for under pressure drilling
- Push rod for coupon release out of the cup drill
- For demanding drillings on PE

Description	Code	Weight (kg)
PE cup drill chipless 45 mm x 60 mm	**709 810 410**	0.510
PE cup drill chipless 60 mm x 60 mm	**709 810 412**	0.580
PE cup drill chipless 63 mm x 60 mm	**709 810 414**	0.590
PE cup drill chipless 80 mm x 60 mm	**709 810 415**	0.880
PE cup drill chipless 84 mm x 60 mm	**709 810 416**	0.910
PE cup drill chipless 45 mm x 120 mm	**709 810 420**	0.800
PE cup drill chipless 60 mm x 120 mm	**709 810 422**	0.890
PE cup drill chipless 63 mm x 120 mm	**709 810 424**	0.890
PE cup drill chipless 80 mm x 120 mm	**709 810 425**	1.340
PE cup drill chipless 84 mm x 120 mm	**709 810 426**	1.370
PE cup drill push rod	**709 700 024**	0.400

MULTI/JOINT® 3057 Plus Wide Range
Flange adaptor, restraint, Uni/Fiksers

Model:

- Suitable for all kinds of pipe material
- Suitable for water and gas
- Ductile cast iron GGG45 body and clamping ring(s), acc. to EN-GJS-450-10
- RESICOAT® epoxy powder coating, according to GSK standards and EN 14901
- NBR or EPDM gasket, NBR acc. to EN 682 (-5°C up to +50°C), EPDM acc. to EN 681-1 (0°C up to +50°C)
- Angular deflection of max. 8° per socket at installation (based on the middle of the range)
- Stainless steel A4 quality (AISI 316) Uni/Fiksers
- Stainless steel A2 quality (AISI 304) or A4 quality (AISI 316) bolts, nuts and washers
- Hygiene protection included DN50 - DN825

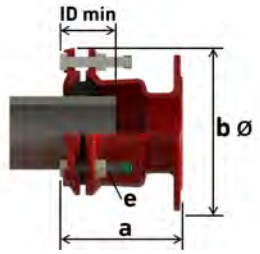

Installation instruction:

- Read the user manual
- For restraint versions, on plastic pipes, the use of an insert stiffener (see accessories) is mandatory, check our technical information
- Please note, when using a MULTI/JOINT® DN625 till DN800 on plastic pipes, the use of the insert stiffener MJ DN625 - DN800 (see accessories) is mandatory
- * DN350 & DN400 for plastic pipe materials = PN 10 bar water / MOP 5 bar gas

Note:

ID min. = minimum insertion depth
DN625 - DN825 sales release from Q1/2021 (for water applications)

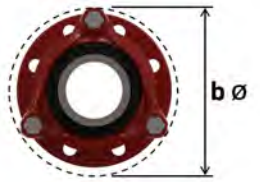

DN (mm)	Range 1 (mm)	Flange 3 (mm)	Drilling pattern	NBR / A2 Code
50	46 - 71	50	PN16	**709 355 210**
65	63 - 90	60/65	PN16	**709 355 212**
80	84 - 105	80	PN16	**709 355 214**
100	104 - 132	100	PN16	**709 355 216**
150	154 - 192	150	PN16	**709 355 220**
200	192 - 232	200	PN10	**709 355 224**

DN (mm)	a (mm)	b (mm)	ID min. (mm)	e (mm)	PN Water (bar)	MOP Gas (bar)	No. of bolt holes flange
50	165 - 187	170	84	3xM12	16	8	4
65	170 - 193	191	84	3xM12	16	8	4
80	170 - 192	210	84	3xM12	16	8	8
100	173 - 199	241	90	3xM16	16	8	8
150	211 - 248	312	110	4xM16	16	8	8
200	221 - 258	371	110	6xM16	16	8	8

Heavy duty transport / storage box for W410 drilling device

Model:

- Outside dimension transport / warehouse box: 120 x 40 x 40 cm

Description	Code	Weight (kg)
Heavy duty transport / storage box for W410 drilling device	**709 706 414**	15.500

UNI-Coupling - stainless steel couplings

UNI-Coupling

UNI-Grip

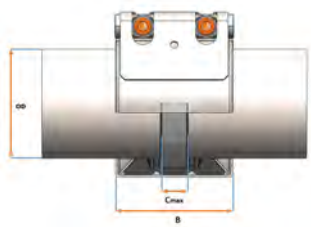

UNI-Grip L PN16

Model:

- Housing, Bars and Strip insert (option): Stainless Steel W5 (1.4571) Quality

Temperature/Pressure:

- Operating temperature EPDM: -30°C to 125°C
- Operating temperature NBR: -20°C to 80°C

Attention:

- **The difference between the different pipe outside diameters OD1<OD2 is 1% or max. 3 mm.**

PN (bar)	EPDM Code	SP	Weight (kg)	NBR Code
16	**779 724 001**	0	0.2	**779 721 001**
16	**779 724 002**	0	0.2	**779 721 002**
16	**779 724 003**	0	0.2	**779 721 003**
16	**779 724 004**	0	0.2	**779 721 004**
16	**779 724 005**	0	0.4	**779 721 005**
16	**779 724 006**	0	0.4	**779 721 006**
16	**779 724 007**	0	0.4	**779 721 007**
16	**779 724 008**	0	0.4	**779 721 008**
16	**779 724 009**	0	0.6	**779 721 009**
16	**779 724 010**	0	0.6	**779 721 010**
16	**779 724 011**	0	1.4	**779 721 011**
16	**779 724 012**	0	1.4	**779 721 012**
16	**779 724 013**	0	1.6	**779 721 013**
16	**779 724 014**	0	1.6	**779 721 014**
16	**779 724 015**	0	1.7	**779 721 015**
16	**779 724 016**	0	1.7	**779 721 016**
16	**779 724 017**	0	1.9	**779 721 017**
16	**779 724 018**	0	1.9	**779 721 018**
16	**779 724 019**	0	3.4	**779 721 019**
16	**779 724 020**	0	3.5	**779 721 020**
16	**779 724 021**	0	3.6	**779 721 021**
16	**779 724 022**	0	3.7	**779 721 022**
16	**779 724 023**	0	3.8	**779 721 023**

M	WP (bar)	C max. (mm)	OD min (mm)	OD nominal (mm) (mm)	OD max. (mm)	OD1 < OD2 (mm)	d (mm)	B (mm)	H (mm)	Torque (N/m)
M6	70	10	21.0	21.0 - 24.0	24.0	1	46	45	76	7
M6	70	10	25.0	25.0 - 29.0	29.0	1	46	45	76	7
M6	70	10	29.0	29.0 - 32.0	32.0	1	54	45	84	7
M6	70	10	33.0	33.0 - 36.0	36.0	1	54	45	84	7
M8	60	15	36.0	36.0 - 39.0	39.0	2	66	60	104	25
M8	50	15	39.0	39.0 - 43.0	43.0	2	66	60	104	25
M8	50	15	43.0	43.0 - 47.5	47.5	2	74	60	112	25
M8	50	15	47.5	47.5 - 52.5	52.5	2	74	60	112	25
M8	50	25	52.5	52.5 - 58.0	58.0	2	85	75	125	25
M8	40	25	58.0	58.0 - 64.0	64.0	3	85	75	125	25
M10	40	30	64.0	64.0 - 72.0	72.0	3	108	95	164	40
M10	40	30	72.0	72.0 - 80.0	80.0	3	108	95	164	40
M10	35	30	80.0	80.0 - 88.0	88.0	3	124	95	170	40
M10	35	30	88.0	88.0 - 96.0	96.0	3	124	95	170	40
M10	35	30	97.0	97.0 - 105.0	105.0	3	141	95	187	40
M10	35	30	104.0	104.0 - 112.0	112.0	3	141	95	187	40
M10	35	30	112.0	112.0 - 120.0	120.0	3	158	95	202	40
M10	32	30	122.0	122.0 - 130.0	130.0	3	158	95	202	40

table continued on the next page

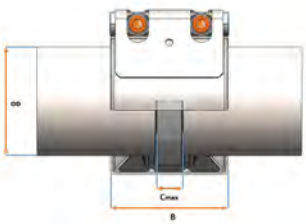

M	WP (bar)	C max. (mm)	OD min (mm)	OD nominal (mm) (mm)	OD max. (mm)	OD1 < OD2 (mm)	d (mm)	B (mm)	H (mm)	Torque (N/m)
M12	32	40	129.0	129.0 - 137.0	137.0	3	178	110	230	65
M12	32	40	137.0	137.0 - 145.0	145.0	3	186	110	238	65
M12	32	40	149.0	149.0 - 157.0	157.0	3	197	110	249	65
M12	32	40	157.0	157.0 - 165.0	165.0	3	205	110	255	65
M12	32	40	164.0	164.0 - 172.0	172.0	3	212	110	262	65

UNI-Grip LE PN10

Model:

- Housing, Bars and Strip insert (option): Stainless Steel W5 (1.4571) Quality

Temperature/Pressure:

- Operating temperature EPDM: -30°C to 125°C
- Operating temperature NBR: -20°C to 80°C

Attention:

- **The difference between the different pipe outside diameters OD1<OD2 is 1% or max. 3 mm.**

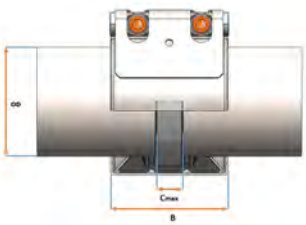

PN (bar)	EPDM Code	SP	Weight (kg)	NBR Code
10	**779 724 411**	0	1.0	**779 721 411**
10	**779 724 412**	0	1.0	**779 721 412**
10	**779 724 413**	0	1.0	**779 721 413**
10	**779 724 414**	0	1.0	**779 721 414**
10	**779 724 415**	0	1.1	**779 721 415**
10	**779 724 416**	0	1.1	**779 721 416**
10	**779 724 417**	0	1.2	**779 721 417**
10	**779 724 418**	0	1.2	**779 721 418**
10	**779 724 419**	0	2.1	**779 721 419**
10	**779 724 420**	0	2.2	**779 721 420**
10	**779 724 421**	0	2.3	**779 721 421**
10	**779 724 422**	0	2.3	**779 721 422**
10	**779 724 423**	0	2.4	**779 721 423**

M	WP (bar)	C max. (mm)	OD min (mm)	OD nominal (mm) (mm)	OD max. (mm)	OD1 < OD2 (mm)	d (mm)	B (mm)	H (mm)	Torque (N/m)
M10	16	30	64	64 - 72	72	3	108	95	164	40
M10	16	30	72	72 - 80	80	3	108	95	164	40
M10	16	30	80	80 - 88	88	3	124	95	170	40
M10	16	30	88	88 - 96	96	3	124	95	170	40
M10	16	30	97	97 - 105	105	3	141	95	187	40
M10	16	30	104	104 - 112	112	3	141	95	187	40
M10	16	30	112	112 - 120	120	3	158	95	202	40
M10	16	30	122	122 - 130	130	3	158	95	202	40
M12	16	40	129	129 - 137	137	3	178	110	230	65
M12	16	40	137	137 - 145	145	3	186	110	238	65
M12	16	40	149	149 - 157	157	3	197	110	249	65
M12	16	40	157	157 - 165	165	3	205	110	255	65
M12	16	40	164	164 - 172	172	3	212	110	262	65

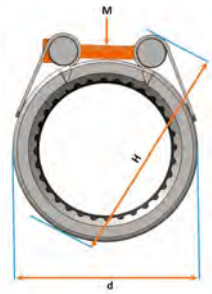

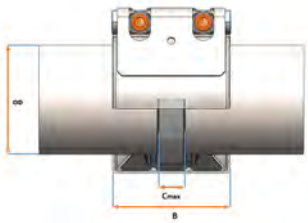

UNI-Grip S PN16

Model:

- Housing, Bars and Strip insert (option): Stainless Steel W5 (1.4571) Quality

Temperature/Pressure:

- Operating temperature EPDM: -30°C to 125°C
- Operating temperature NBR: -20°C to 80°C

Option:

- Sealing type Viton (FKM) for OD nominal ≥ 185 mm on request

*Restricted working conditions for CuNiFe tubes with a wall thickness ≤ to 4 mm. For pipe dimensions with an asterix, these may only be loaded with max PN 2,5.

Attention:

- **The difference between the different pipe outside diameters OD1<OD2 is 1% or max. 3 mm.**

	PN (bar)	OD nominal (mm) (mm)	EPDM Code	SP	Weight (kg)	NBR Code
	16	21.0 - 24.0	**779 764 001**	0	0.2	**779 762 001**
	16	25.0 - 29.0	**779 764 002**	0	0.2	**779 762 002**
	16	29.0 - 32.0	**779 764 003**	0	0.2	**779 762 003**
	16	33.0 - 36.0	**779 764 004**	0	0.2	**779 762 004**
	16	36.0 - 39.0	**779 764 005**	0	0.4	**779 762 005**
	16	39.0 - 43.0	**779 764 006**	0	0.4	**779 762 006**
	16	43.0 - 47.5	**779 764 007**	0	0.4	**779 762 007**
	16	47.5 - 52.5	**779 764 008**	0	0.4	**779 762 008**
	16	52.5 - 58.0	**779 764 009**	0	0.6	**779 762 009**
	16	58.0 - 64.0	**779 764 010**	0	0.6	**779 762 010**
	16	64.0 - 72.0	**779 764 011**	0	1.4	**779 762 011**
	16	72.0 - 80.0	**779 764 012**	0	1.4	**779 762 012**
	16	80.0 - 88.0	**779 764 013**	0	1.6	**779 762 013**
	16	88.0 - 96.0	**779 764 014**	0	1.6	**779 762 014**
	16	97.0 - 105.0	**779 764 015**	0	1.7	**779 762 015**
	16	104.0 - 112.0	**779 764 016**	0	1.7	**779 762 016**
	16	112.0 - 120.0	**779 764 017**	0	1.9	**779 762 017**
	16	122.0 - 130.0	**779 764 018**	0	1.9	**779 762 018**
	16	129.0 - 137.0	**779 764 019**	0	3.4	**779 762 019**
	16	137.0 - 145.0	**779 764 020**	0	3.5	**779 762 020**
	16	149.0 - 157.0	**779 764 021**	0	3.6	**779 762 021**
	16	157.0 - 165.0	**779 764 022**	0	3.7	**779 762 022**
	16	164.0 - 172.0	**779 764 023**	0	3.8	**779 762 023**
	16	185.0 - 198.0	**779 764 024**	0	6.5	**779 762 024**
	16	198.0 - 211.0	**779 764 025**	0	6.7	**779 762 025**
	16	210.0 - 223.0	**779 764 026**	0	9.2	**779 762 026**
	16	221.0 - 234.0	**779 764 027**	0	9.5	**779 762 027**
	16	234.0 - 247.0	**779 764 028**	0	9.8	**779 762 028**
	16	247.0 - 260.0	**779 764 029**	0	10.1	**779 762 029**
*	16	263.0 - 276.0	**779 764 030**	0	10.5	**779 762 030**
	16	277.0 - 290.0	**779 764 031**	0	10.9	**779 762 031**

	M	WP (bar)	C max. (mm)	OD min (mm)	OD max. (mm)	OD1 < OD2 (mm)	d (mm)	B (mm)	H (mm)	Torque (N/m)
	M6	70	10	21.0	24.0	1	46	45	76	7
	M6	70	10	25.0	29.0	1	46	45	76	7
	M6	70	10	29.0	32.0	1	54	45	84	7
	M6	70	10	33.0	36.0	1	54	45	84	7
	M8	60	15	36.0	39.0	2	66	60	104	25
	M8	50	15	39.0	43.0	2	66	60	104	25
	M8	50	15	43.0	47.5	2	74	60	112	25
	M8	50	15	47.5	52.5	2	74	60	112	25
	M8	50	25	52.5	58.0	2	85	75	125	25
	M8	40	25	58.0	64.0	3	85	75	125	25
	M10	40	30	64.0	72.0	3	108	95	164	40
	M10	40	30	72.0	80.0	3	108	95	164	40
	M10	35	30	80.0	88.0	3	124	95	170	40
	M10	35	30	88.0	96.0	3	124	95	170	40

table continued on the next page

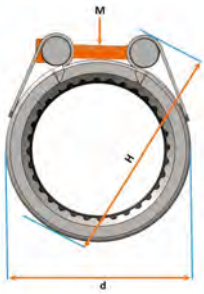

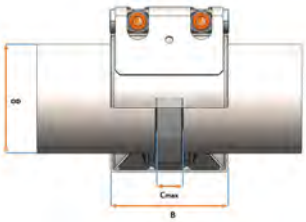

	M	WP (bar)	C max. (mm)	OD min (mm)	OD max. (mm)	OD1 < OD2 (mm)	d (mm)	B (mm)	H (mm)	Torque (N/m)
	M10	35	30	97.0	105.0	3	141	95	187	40
	M10	35	30	104.0	112.0	3	141	95	187	40
	M10	35	30	112.0	120.0	3	158	95	202	40
	M10	32	30	122.0	130.0	3	158	95	202	40
	M12	32	40	129.0	137.0	3	178	110	230	65
	M12	32	40	137.0	145.0	3	186	110	238	65
	M12	32	40	149.0	157.0	3	197	110	249	65
	M12	32	40	157.0	165.0	3	205	110	255	65
	M12	32	40	164.0	172.0	3	212	110	262	65
	M16	25	40	185.0	198.0	3	236	138	262	160
	M16	25	40	198.0	211.0	3	249	138	275	160
	M16	25	40	210.0	223.0	3	261	140	287	160
	M16	25	40	221.0	234.0	3	272	140	298	160
	M16	25	40	234.0	247.0	3	285	140	311	160
	M16	25	40	247.0	260.0	3	298	140	324	160
*	M16	25	40	263.0	276.0	3	314	140	340	160
	M16	25	40	277.0	290.0	3	328	142	354	160

UNI-Grip S PN10

Model:

- Housing, Bars and Strip insert (option): Stainless Steel W5 (1.4571) Quality

Temperature/Pressure:

- Operating temperature EPDM: -30°C to 125°C
- Operating temperature NBR: -20°C to 80°C

Option:

- Sealing type Viton (FKM) on request
- *Restricted working conditions for CuNiFe tubes with a wall thickness ≤ to 4 mm. For pipe dimensions with an asterix, these may only be loaded with max PN 2,5.

Attention:

- **The difference between the different pipe outside diameters OD1<OD2 is 1% or max. 3 mm.**

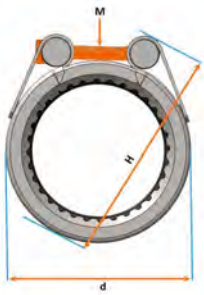

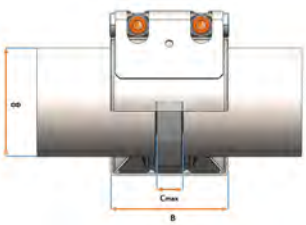

	PN (bar)	EPDM Code	SP	Weight (kg)	NBR Code
	10	**779 764 126**	0	6.9	**779 762 126**
	10	**779 764 127**	0	7.0	**779 762 127**
	10	**779 764 128**	0	7.2	**779 762 128**
	10	**779 764 129**	0	7.5	**779 762 129**
*	10	**779 764 130**	0	7.7	**779 762 130**
*	10	**779 764 131**	0	7.9	**779 762 131**
*	10	**779 764 132**	0	11.1	**779 762 132**
*	10	**779 764 133**	0	11.5	**779 762 133**
*	10	**779 764 134**	0	11.8	**779 762 134**
*	10	**779 764 135**	0	12.1	**779 762 135**
*	10	**779 764 136**	0	12.4	**779 762 136**
*	10	**779 764 137**	0	12.7	**779 762 137**
*	10	**779 764 138**	0	13.0	**779 762 138**

	M	WP (bar)	C max. (mm)	OD min (mm)	OD nominal (mm) (mm)	OD max. (mm)	OD1 < OD2 (mm)	d (mm)	B (mm)	H (mm)
	M16	16	40	210	210 - 223	223	3	261	138	287
	M16	16	40	221	221 - 234	234	3	272	138	298
	M16	16	40	234	234 - 247	247	3	285	138	311
	M16	16	40	247	247 - 260	260	3	298	138	324
*	M16	16	40	263	263 - 276	276	3	314	138	340
*	M16	16	40	277	277 - 290	290	3	328	140	354
*	M16	16	40	288	288 - 301	301	3	339	140	365
*	M16	16	40	301	301 - 314	314	3	352	140	378
*	M16	16	40	315	315 - 328	328	3	366	140	392

table continued on the next page

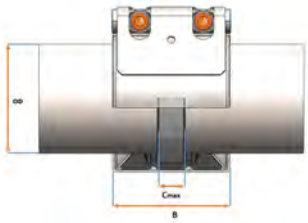

	M	WP (bar)	C max. (mm)	OD min (mm)	OD nominal (mm) (mm)	OD max. (mm)	OD1 < OD2 (mm)	d (mm)	B (mm)	H (mm)	Torque (N/m)
*	M16	16	40	327	327 - 340	340	3	378	140	404	160
*	M16	16	40	340	340 - 353	353	3	391	140	417	160
*	M16	16	40	350	350 - 363	363	3	401	140	427	160
*	M16	16	40	361	361 - 374	374	3	412	142	438	160
											160
											160
											160
											160
											160
											160
											160
											160
											160
											160
											160
											160
											160

UNI-Plastgrip

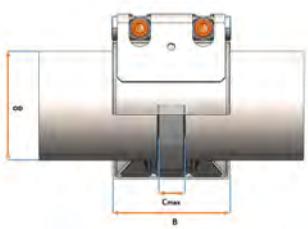

UNI-Plastgrip L PN10

Model:

- Housing, Bars and Strip insert (option): Stainless Steel W5 (1.4571) Quality

Temperature/Pressure:

- Operating temperature EPDM: -30°C to 125°C
- Operating temperature NBR: -20°C to 80°C

Remark:

- **For safe installation on PVC-, ABS-, PE-, PP- and PB-pipes insert stiffeners are mandatory**

Attention:

- **The difference between the different pipe outside diameters OD1<OD2 is 1% or max. 3 mm.**

PN (bar)	EPDM Code	SP	Weight (kg)	NBR Code
10	**779 732 006**	0	0.4	**779 729 006**
10	**779 732 008**	0	0.5	**779 729 008**
10	**779 732 010**	0	0.6	**779 729 010**
10	**779 732 012**	0	1.4	**779 729 012**
10	**779 732 014**	0	1.5	**779 729 014**
10	**779 732 016**	0	1.7	**779 729 016**
10	**779 732 018**	0	1.8	**779 729 018**
10	**779 732 020**	0	3.5	**779 729 020**
10	**779 732 022**	0	3.7	**779 729 022**

M	WP (bar)	C max. (mm)	OD min (mm)	OD nominal (mm) (mm)	OD max. (mm)	OD1 < OD2 (mm)	d (mm)	B (mm)	H (mm)	Torque (N/m)
M8	16	15	39.0	40	43.0	2	66	60	104	25
M8	16	15	47.5	50	52.5	2	74	60	112	25
M8	16	25	58.0	63	64.0	3	85	75	125	25
M10	16	30	72.0	75	80.0	3	108	95	164	40
M10	16	30	88.0	90	96.0	3	124	95	170	40

table continued on the next page

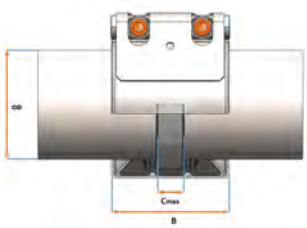

M	WP (bar)	C max. (mm)	OD min (mm)	OD nominal (mm) (mm)	OD max. (mm)	OD1 < OD2 (mm)	d (mm)	B (mm)	H (mm)	Torque (N/m)
M10	16	30	104.0	110	112.0	3	141	95	187	40
M10	16	30	122.0	125	130.0	3	158	95	202	40
M12	16	40	137.0	140	145.0	3	186	110	238	65
M12	16	40	157.0	160	165.0	3	205	110	255	65

UNI-Plastgrip S PN10

Model:

- Housing, Bars and Strip insert (option): Stainless Steel W5 (1.4571) Quality

Temperature/Pressure:

- Operating temperature EPDM: -30°C to 125°C
- Operating temperature NBR: -20°C to 80°C

Option:

- Sealing type Viton (FKM) on request

Remark:

- **For safe installation on PVC-, ABS-, PE-, PP- and PB-pipes insert stiffeners are mandatory**

Attention:

- **The difference between the different pipe outside diameters OD1<OD2 is 1% or max. 3 mm.**

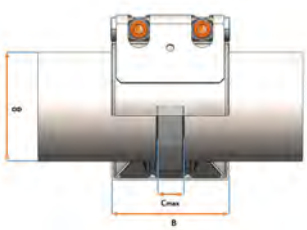

PN (bar)	OD nominal (mm) (mm)	EPDM Code	SP	Weight (kg)	NBR Code
10	180	**779 712 024**	0	6.0	**779 709 024**
10	200	**779 712 025**	0	6.6	**779 709 025**
10	225	**779 712 027**	0	7.0	**779 709 027**
10	250	**779 712 029**	0	7.5	**779 709 029**
10	280	**779 712 030**	0	8.7	**779 709 030**
10	315	**779 712 031**	0	11.1	**779 709 031**
10	355	**779 712 032**	0	12.2	**779 709 032**

M	WP (bar)	C max. (mm)	OD min (mm)	OD max. (mm)	OD1 < OD2 (mm)	d (mm)	B (mm)	H (mm)	Torque (N/m)
M16	16	40	172	185	3	223	138	259	160
M16	16	40	195	208	3	246	138	272	160
M16	16	40	215	228	3	272	138	298	160
M16	16	40	247	260	3	298	138	324	160
M16	16	40	269	282	3	320	142	346	160
M16	16	40	312	325	3	363	146	389	160
M16	16	40	350	363	3	401	146	427	160

UNI-Combigrip

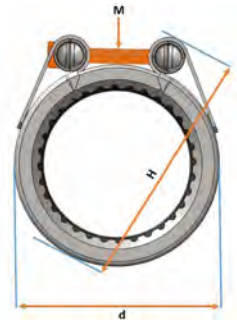

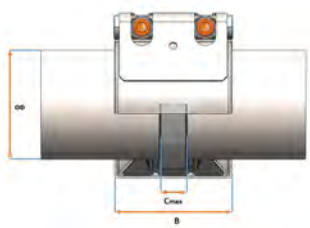

UNI-Combigrip L PN10

Model:

- Housing, Bars and Strip insert (option): Stainless Steel W5 (1.4571) Quality

Temperature/Pressure:

- Operating temperature EPDM: -30°C to 125°C
- Operating temperature NBR: -20°C to 80°C

Remark:

- **For safe installation on PVC-, ABS-, PE-, PP- and PB-pipes insert stiffeners are mandatory**

Attention:

- **The difference between the different pipe outside diameters OD1<OD2 is 1% or max. 3 mm.**

PN (bar)	EPDM Code	SP	Weight (kg)	NBR Code
10	**779 740 006**	0	0.4	**779 737 006**
10	**779 740 008**	0	0.5	**779 737 008**
10	**779 740 010**	0	0.6	**779 737 010**
10	**779 740 012**	0	1.4	**779 737 012**
10	**779 740 014**	0	1.5	**779 737 014**
10	**779 740 016**	0	1.7	**779 737 016**
10	**779 740 017**	0	1.7	**779 737 017**
10	**779 740 018**	0	1.8	**779 737 018**
10	**779 740 020**	0	3.5	**779 737 020**
10	**779 740 022**	0	3.7	**779 737 022**
10	**779 740 024**	0	3.8	**779 737 024**

M	WP (bar)	C max. (mm)	OD min (mm)	OD nominal (mm) (mm)	OD max. (mm)	OD1 < OD2 (mm)	d (mm)	B (mm)	H (mm)	Torque (N/m)
M8	16	15	39.0	39.0 - 43.0	43.0	2	66	60	104	25
M8	16	15	47.5	47.5 - 52.5	52.5	2	74	60	112	25
M8	16	25	58.0	58.0 - 64.0	64.0	3	85	75	125	25
M10	16	30	72.0	72.0 - 80.0	80.0	3	108	95	164	40
M10	16	30	88.0	88.0 - 96.0	96.0	3	124	95	170	40
M10	16	30	104.0	104.0 - 112.0	112.0	3	141	95	187	40
M10	16	30	108.0	108.0 - 115.0	115.0	5	141	95	187	40
M10	16	30	122.0	122.0 - 130.0	130.0	3	158	95	202	40
M12	16	40	137.0	137.0 - 145.0	145.0	3	186	110	238	65
M12	16	40	157.0	157.0 - 165.0	165.0	3	205	110	255	65
M12	16	40	164.0	164.0 - 172.0	172.0	1	212	110	262	65

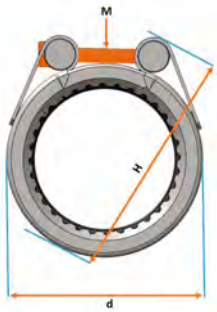

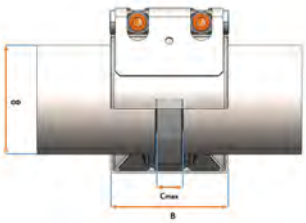

UNI-Combigrip S PN10
EPDM

Model:

- Housing, Bars and Strip insert (option): Stainless Steel W5 (1.4571) Quality

Temperature/Pressure:

- Operating temperature EPDM: -30°C to 125°C
- Operating temperature NBR: -20°C to 80°C

Option:

- Sealing type Viton (FKM) on request

Remark:

- **For safe installation on PVC-, ABS-, PE-, PP- and PB-pipes insert stiffeners are mandatory**

Attention:

- **The difference between the different pipe outside diameters OD1<OD2 is 1% or max. 3 mm.**

PN (bar)	OD nominal (mm) (mm)	EPDM Code	SP	Weight (kg)	NBR Code
10	172 - 185	**779 724 924**	0	6.2	**779 721 924**
10	195 - 208	**779 724 925**	0	6.6	**779 721 925**
10	215 - 228	**779 724 926**	0	7.3	**779 721 926**
10	247 - 260	**779 724 927**	0	8.1	**779 721 927**
10	269 - 282	**779 724 928**	0	8.7	**779 721 928**
10	312 - 325	**779 724 929**	0	11.1	**779 721 929**
10	350 - 363	**779 724 930**	0	12.2	**779 721 930**

M	WP (bar)	C max. (mm)	OD min (mm)	OD max. (mm)	d (mm)	B (mm)	H (mm)	Torque (N/m)
M16	16	40	172	185	223	142	249	160
M16	16	40	195	208	246	142	272	160
M16	16	40	215	228	266	142	292	160
M16	16	40	247	260	298	142	324	160
M16	16	40	269	282	320	142	346	160
M16	16	40	312	325	363	142	389	160
M16	16	40	350	363	401	142	427	160

UNI-Flex

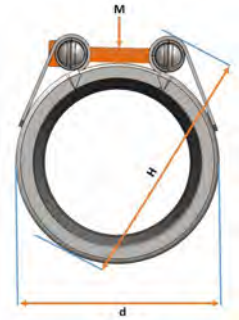

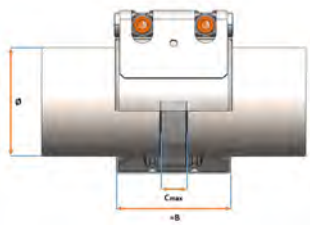

UNI-Flex L PN16

Model:

- Housing, Bars and Strip insert (option): Stainless Steel W5 (1.4571) Quality

Temperature/Pressure:

- Operating temperature EPDM: -30°C to 125°C
- Operating temperature NBR: -20°C to 80°C

Remark:

- **For safe installation on PVC-, ABS-, PE-, PP- and PB-pipes insert stiffeners are mandatory**

Attention:

- **The difference between the different pipe outside diameters OD1<OD2 is 1% or max. 3 mm.**

PN (bar)	EPDM Code	SP	Weight (kg)	NBR Code
16	**779 812 001**	0	0.2	**779 809 001**
16	**779 812 002**	0	0.2	**779 809 002**
16	**779 812 003**	0	0.2	**779 809 003**
16	**779 812 004**	0	0.2	**779 809 004**
16	**779 812 005**	0	0.4	**779 809 005**
16	**779 812 006**	0	0.4	**779 809 006**
16	**779 812 007**	0	0.4	**779 809 007**
16	**779 812 008**	0	0.4	**779 809 008**
16	**779 812 009**	0	0.6	**779 809 009**
16	**779 812 010**	0	0.6	**779 809 010**
16	**779 812 011**	0	1.0	**779 809 011**
16	**779 812 012**	0	1.0	**779 809 012**
16	**779 812 013**	0	1.0	**779 809 013**
16	**779 812 014**	0	1.0	**779 809 014**
16	**779 812 015**	0	1.1	**779 809 015**
16	**779 812 016**	0	1.1	**779 809 016**
16	**779 812 017**	0	1.2	**779 809 017**
16	**779 812 018**	0	1.2	**779 809 018**
16	**779 812 019**	0	2.1	**779 809 019**
16	**779 812 020**	0	2.2	**779 809 020**
16	**779 812 021**	0	2.3	**779 809 021**
16	**779 812 022**	0	2.3	**779 809 022**
16	**779 812 023**	0	2.4	**779 809 023**

M	WP (bar)	C max. (mm)	OD min (mm)	OD nominal (mm) (mm)	OD max. (mm)	OD1 < OD2 (mm)	d (mm)	B (mm)	H (mm)	Torque (N/m)
M6	25	10	21.0	21.0 - 24.0	24.0	1	46	45	76	3.0
M6	25	10	25.0	25.0 - 29.0	29.0	1	46	45	76	3.0
M6	25	10	29.0	29.0 - 32.0	32.0	1	54	45	84	3.0
M6	25	10	33.0	33.0 - 36.0	36.0	1	54	45	84	3.0
M8	25	15	36.0	36.0 - 39.0	39.0	2	66	60	104	5.0
M8	25	15	39.0	39.0 - 43.0	43.0	2	66	60	104	5.0
M8	25	15	43.0	43.0 - 47.5	47.5	2	74	60	112	5.0
M8	25	15	47.5	47.5 - 52.5	52.5	2	74	60	112	5.0
M8	25	25	52.5	52.5 - 58.0	58.0	2	85	75	125	5.0
M8	25	25	58.0	58.0 - 64.0	64.0	3	85	75	125	5.0
M10	25	30	64.0	64.0 - 72.0	72.0	3	108	95	164	10.0
M10	25	30	72.0	72.0 - 80.0	80.0	3	108	95	164	10.0
M10	25	30	80.0	80.0 - 88.0	88.0	3	124	95	170	10.0
M10	25	30	88.0	88.0 - 96.0	96.0	3	124	95	170	10.0
M10	25	30	97.0	97.0 - 105.0	105.0	3	141	95	187	10.0
M10	25	30	104.0	104.0 - 112.0	112.0	3	141	95	187	10.0
M10	25	30	112.0	112.0 - 120.0	120.0	3	158	95	202	12.5
M10	25	30	122.0	122.0 - 130.0	130.0	3	158	95	202	12.5
M12	25	40	129.0	129.0 - 137.0	137.0	3	178	110	230	20.0

table continued on the next page

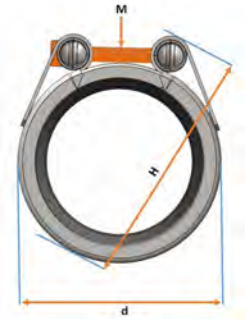

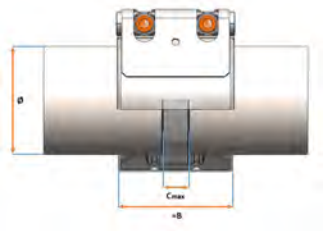

M	WP (bar)	C max. (mm)	OD min (mm)	OD nominal (mm) (mm)	OD max. (mm)	OD1 < OD2 (mm)	d (mm)	B (mm)	H (mm)	Torque (N/m)
M12	25	40	137.0	137.0 - 145.0	145.0	3	186	110	238	25.0
M12	25	40	149.0	149.0 - 157.0	157.0	3	197	110	249	30.0
M12	25	40	157.0	157.0 - 165.0	165.0	3	205	110	255	30.0
M12	25	40	164.0	164.0 - 172.0	172.0	3	212	110	262	30.0

UNI-Flex S PN16

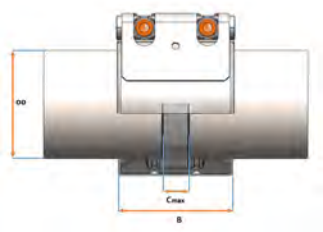

Model:

- Housing, Bars and Strip insert (option): Stainless Steel W5 (1.4571) Quality

Temperature/Pressure:

- Operating temperature EPDM: -30°C to 125°C
- Operating temperature NBR: -20°C to 80°C

Option:

- Sealing type Viton (FKM) on request

Remark:

- **For safe installation on PVC-, ABS-, PE-, PP- and PB-pipes insert stiffeners are mandatory**

Attention:

- **The difference between the different pipe outside diameters OD1<OD2 is 1% or max. 3 mm.**

PN (bar)	EPDM Code	SP	Weight (kg)	NBR Code
16	**779 864 025**	0	5.2	**779 862 025**
16	**779 864 026**	0	5.3	**779 862 026**
16	**779 864 027**	0	5.5	**779 862 027**
16	**779 864 028**	0	5.6	**779 862 028**
16	**779 864 029**	0	5.8	**779 862 029**
16	**779 864 030**	0	6.0	**779 862 030**
16	**779 864 024**	0	5.0	**779 862 024**
16	**779 864 031**	0	7.6	**779 862 031**
16	**779 864 032**	0	7.8	**779 862 032**
16	**779 864 033**	0	8.0	**779 862 033**
16	**779 864 034**	0	8.2	**779 862 034**
16	**779 864 035**	0	8.4	**779 862 035**
16	**779 864 036**	0	8.6	**779 862 036**
16	**779 864 037**	0	8.8	**779 862 037**
16	**779 864 038**	0	12.6	**779 862 038**
16	**779 864 039**	0	12.9	**779 862 039**
16	**779 864 040**	0	13.3	**779 862 040**
16	**779 864 041**	0	13.6	**779 862 041**
16	**779 864 042**	0	13.9	**779 862 042**
16	**779 864 043**	0	14.1	**779 862 043**
16	**779 864 044**	0	14.5	**779 862 044**
16	**779 864 045**	0	14.9	**779 862 045**
16	**779 864 046**	0	15.1	**779 862 046**
16	**779 864 047**	0	15.5	**779 862 047**
16	**779 864 048**	0	15.8	**779 862 048**
16	**779 864 049**	0	16.2	**779 862 049**

table continued on the next page

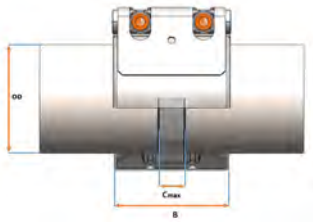

PN (bar)	EPDM Code	SP	Weight (kg)	NBR Code
16	**779 864 050**	0	16.6	**779 862 050**
16	**779 864 051**	0	16.9	**779 862 051**
16	**779 864 052**	0	17.2	**779 862 052**
16	**779 864 053**	0	17.5	**779 862 053**
16	**779 864 054**	0	17.9	**779 862 054**
16	**779 864 055**	0	18.6	**779 862 055**
16	**779 864 056**	0	18.9	**779 862 056**
16	**779 864 057**	0	19.3	**779 862 057**
16	**779 864 058**	0	19.8	**779 862 058**
16	**779 864 059**	0	20.5	**779 862 059**
16	**779 864 060**	0	20.8	**779 862 060**
16	**779 864 061**	0	21.1	**779 862 061**
16	**779 864 062**	0	21.5	**779 862 062**
16	**779 864 063**	0	21.9	**779 862 063**

M	WP (bar)	C max. (mm)	OD min (mm)	OD nominal (mm) (mm)	OD max. (mm)	OD1 < OD2 (mm)	d (mm)	B (mm)	H (mm)	Torque (N/m)
M12	25	40	198	198 - 211	211	3	249	140	275	30
M12	25	40	210	210 - 223	223	3	261	140	287	30
M12	25	40	221	221 - 234	234	3	272	140	298	30
M12	25	40	234	234 - 247	247	3	285	140	311	30
M12	25	40	247	247 - 260	260	3	298	140	324	30
M12	25	40	263	263 - 276	276	3	314	140	340	30
M12	25	40	185	185 - 198	198	3	236	140	262	30
M16	25	40	277	277 - 290	290	3	328	142	354	30
M16	25	40	288	288 - 301	301	3	339	142	365	30
M16	25	40	301	301 - 314	314	3	352	142	378	30
M16	25	40	315	315 - 328	328	3	366	142	392	30
M16	25	40	327	327 - 340	340	3	378	142	404	50
M16	25	40	340	340 - 353	353	3	391	142	417	50
M16	25	40	350	350 - 363	363	3	401	142	427	50
M16	25	40	361	361 - 374	374	3	412	146	438	50
M16	25	40	374	374 - 387	387	3	425	146	451	50
M16	25	40	387	387 - 400	400	3	438	146	464	50
M16	25	40	400	400 - 413	413	3	451	146	477	50
M16	25	40	412	412 - 425	425	3	463	146	489	50
M16	25	40	422	422 - 435	435	3	473	146	499	50
M16	25	40	438	438 - 451	451	3	489	146	515	50
M16	25	40	451	451 - 464	464	3	502	146	528	50
M16	25	40	460	460 - 473	473	3	511	146	537	50
M16	25	40	476	476 - 489	489	3	527	146	553	50
M16	25	40	488	488 - 501	501	3	539	146	565	50
M16	25	40	503	503 - 516	516	3	554	146	580	50
M16	25	40	520	520 - 533	533	3	575	146	603	60
M16	25	40	531	531 - 544	544	3	586	146	614	60
M16	25	40	546	546 - 559	559	3	601	146	629	60
M16	25	40	557	557 - 570	570	3	612	146	640	60
M16	25	40	571	571 - 584	584	3	626	146	654	60
M16	25	40	600	600 - 613	613	3	655	146	683	60
M16	25	40	610	610 - 623	623	3	665	146	693	70
M16	25	40	628	628 - 641	641	3	683	146	711	70
M16	25	40	648	648 - 661	661	3	703	146	731	70
M16	25	40	676	676 - 689	689	3	731	146	759	70
M16	25	40	688	688 - 701	701	3	743	146	771	70
M16	25	40	700	700 - 713	713	3	755	146	783	70
M16	25	40	717	717 - 730	730	3	772	146	800	70
M16	25	40	732	732 - 745	745	3	787	146	815	70

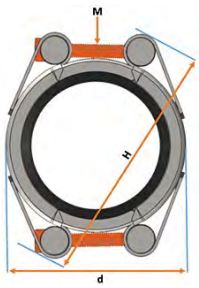

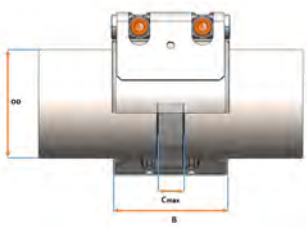

UNI-Flex S2 PN16

Model:

- Housing, Bars and Strip insert (option): Stainless Steel W5 (1.4571) Quality

Temperature/Pressure:

- Operating temperature EPDM: -30°C to 125°C
- Operating temperature NBR: -20°C to 80°C

Option:

- Sealing type Viton (FKM) on request

Remark:

- **For safe installation on PVC-, ABS-, PE-, PP- and PB-pipes insert stiffeners are mandatory**

Attention:

- **The difference between the different pipe outside diameters OD1<OD2 is 1% or max. 3 mm.**

PN (bar)	OD nominal (mm) (mm)	EPDM Code	SP	Weight (kg)	NBR Code
16	756 - 782	**779 864 064**	0	26.1	**779 862 064**
16	782 - 808	**779 864 065**	0	26.7	**779 862 065**
16	806 - 832	**779 864 066**	0	27.3	**779 862 066**
16	828 - 854	**779 864 067**	0	27.9	**779 862 067**
16	856 - 882	**779 864 068**	0	28.6	**779 862 068**
16	882 - 908	**779 864 069**	0	29.2	**779 862 069**
16	904 - 930	**779 864 070**	0	29.8	**779 862 070**

M	WP (bar)	C max. (mm)	OD min (mm)	OD max. (mm)	OD1 < OD2 (mm)	d (mm)	B (mm)	H (mm)	Torque (N/m)
M16	25	40	756	782	3	824	146	852	70
M16	25	40	782	808	3	850	146	878	70
M16	25	40	806	832	3	874	146	902	70
M16	25	40	828	854	3	896	146	924	80
M16	25	40	856	882	3	924	146	952	80
M16	25	40	882	908	3	950	146	978	80
M16	25	40	904	930	3	972	146	1000	80

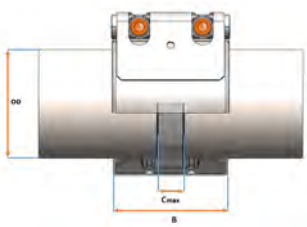

UNI-Flex S PN10

Model:

- Housing, Bars and Strip insert (option): Stainless Steel W5 (1.4571) Quality

Temperature/Pressure:

- Operating temperature EPDM: -30°C to 125°C
- Operating temperature NBR: -20°C to 80°C

Option:

- Sealing type Viton (FKM) on request

Remark:

- **For safe installation on PVC-, ABS-, PE-, PP- and PB-pipes insert stiffeners are mandatory**

Attention:

- **The difference between the different pipe outside diameters OD1<OD2 is 1% or max. 3 mm.**

PN (bar)	OD nominal (mm) (mm)	EPDM Code	SP	Weight (kg)	NBR Code
10	185 - 198	**779 864 124**	0	3.9	**779 862 124**
10	198 - 211	**779 864 125**	0	4.0	**779 862 125**
10	210 - 223	**779 864 126**	0	4.1	**779 862 126**
10	221 - 234	**779 864 127**	0	4.2	**779 862 127**
10	234 - 247	**779 864 128**	0	4.3	**779 862 128**
10	247 - 260	**779 864 129**	0	4.4	**779 862 129**
10	263 - 276	**779 864 130**	0	4.6	**779 862 130**
10	277 - 290	**779 864 131**	0	6.1	**779 862 131**
10	288 - 301	**779 864 132**	0	6.3	**779 862 132**
10	301 - 314	**779 864 133**	0	6.4	**779 862 133**

table continued on the next page

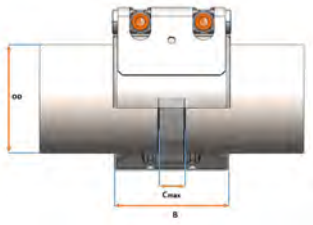

PN (bar)	OD nominal (mm) (mm)	EPDM Code	SP	Weight (kg)	NBR Code
10	315 - 328	**779 864 134**	0	6.6	**779 862 134**
10	327 - 340	**779 864 135**	0	6.8	**779 862 135**
10	340 - 353	**779 864 136**	0	6.9	**779 862 136**
10	350 - 363	**779 864 137**	0	7.0	**779 862 137**
10	361 - 374	**779 864 138**	0	8.9	**779 862 138**
10	374 - 387	**779 864 139**	0	9.1	**779 862 139**
10	387 - 400	**779 864 140**	0	9.4	**779 862 140**
10	400 - 413	**779 864 141**	0	9.6	**779 862 141**
10	412 - 425	**779 864 142**	0	9.8	**779 862 142**
10	422 - 435	**779 864 143**	0	9.9	**779 862 143**
10	438 - 451	**779 864 144**	0	10.2	**779 862 144**
10	451 - 464	**779 864 145**	0	10.4	**779 862 145**
10	460 - 473	**779 864 146**	0	10.5	**779 862 146**
10	476 - 489	**779 864 147**	0	10.8	**779 862 147**
10	488 - 501	**779 864 148**	0	11.0	**779 862 148**
10	503 - 516	**779 864 149**	0	11.2	**779 862 149**
10	520 - 533	**779 864 150**	0	11.5	**779 862 150**
10	531 - 544	**779 864 151**	0	11.7	**779 862 151**
10	546 - 559	**779 864 152**	0	11.9	**779 862 152**
10	557 - 570	**779 864 153**	0	12.1	**779 862 153**
10	571 - 584	**779 864 154**	0	12.3	**779 862 154**
10	600 - 613	**779 864 155**	0	12.8	**779 862 155**
10	610 - 623	**779 864 156**	0	12.9	**779 862 156**
10	628 - 641	**779 864 157**	0	13.2	**779 862 157**
10	648 - 661	**779 864 158**	0	13.5	**779 862 158**
10	676 - 689	**779 864 159**	0	14.0	**779 862 159**
10	688 - 701	**779 864 160**	0	14.2	**779 862 160**
10	700 - 713	**779 864 161**	0	14.4	**779 862 161**
10	717 - 730	**779 864 162**	0	14.7	**779 862 162**
10	732 - 745	**779 864 163**	0	14.9	**779 862 163**

M	WP (bar)	C max. (mm)	OD min (mm)	OD max. (mm)	OD1 < OD2 (mm)	d (mm)	B (mm)	H (mm)	Torque (N/m)
M12	16	40	185	198	3	236	138	262	30
M12	16	40	198	211	3	249	138	275	30
M12	16	40	210	223	3	261	138	287	30
M12	16	40	221	234	3	272	138	298	30
M12	16	40	234	247	3	285	138	311	30
M12	16	40	247	260	3	298	138	324	30
M12	16	40	263	276	3	314	138	340	30
M12	16	40	277	290	3	328	140	354	30
M12	16	40	288	301	3	339	140	365	30
M12	16	40	301	314	3	352	140	378	30
M12	16	40	315	328	3	366	140	392	30
M12	16	40	327	340	3	378	140	404	40
M12	16	40	340	353	3	391	140	417	40
M12	16	40	350	363	3	401	140	427	40
M12	16	40	361	374	3	412	142	438	40
M12	16	40	374	387	3	425	142	451	40
M12	16	40	387	400	3	438	142	464	40
M12	16	40	400	413	3	451	142	477	40
M12	16	40	412	425	3	463	142	489	40
M12	16	40	422	435	3	473	142	499	40
M12	16	40	438	451	3	489	142	515	40
M12	16	40	451	464	3	502	142	528	40
M12	16	40	460	473	3	511	142	537	40
M12	16	40	476	489	3	527	142	553	40
M12	16	40	488	501	3	539	142	565	40
M12	16	40	503	516	3	554	142	580	40
M16	16	40	520	533	3	575	142	603	50
M16	16	40	531	544	3	586	142	614	50
M16	16	40	546	559	3	601	142	629	50

table continued on the next page

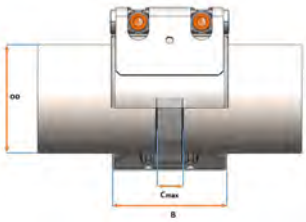

M	WP (bar)	C max. (mm)	OD min (mm)	OD max. (mm)	OD1 < OD2 (mm)	d (mm)	B (mm)	H (mm)	Torque (N/m)
M16	16	40	557	570	3	612	142	640	50
M16	16	40	571	584	3	626	142	654	50
M16	16	40	600	613	3	655	142	683	50
M16	16	40	610	623	3	665	142	693	60
M16	16	40	628	641	3	683	142	711	60
M16	16	40	648	661	3	703	142	731	60
M16	16	40	676	689	3	731	142	759	60
M16	16	40	688	701	3	743	142	771	60
M16	16	40	700	713	3	755	142	783	60
M16	16	40	717	730	3	772	142	800	60
M16	16	40	732	745	3	787	142	815	60

UNI-Flex S2/S3 PN10

Model:

- Housing, Bars and Strip insert (option): Stainless Steel W5 (1.4571) Quality

Temperature/Pressure:

- Operating temperature EPDM: -30°C to 125°C
- Operating temperature NBR: -20°C to 80°C

Option:

- Sealing type Viton (FKM) on request

Remark:

- **For safe installation on PVC-, ABS-, PE-, PP- and PB-pipes insert stiffeners are mandatory**

Attention:

- **The difference between the different pipe outside diameters OD1<OD2 is 1% or max. 3 mm.**

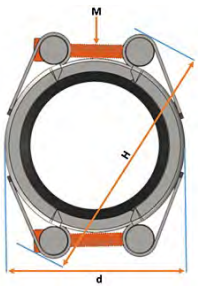

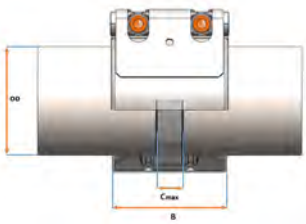

PN (bar)	OD nominal (mm) (mm)	EPDM Code	SP	Weight (kg)	NBR Code
10	756 - 782	**779 864 164**	0	18.4	**779 862 164**
10	782 - 808	**779 864 165**	0	18.8	**779 862 165**
10	806 - 832	**779 864 166**	0	19.2	**779 862 166**
10	828 - 854	**779 864 167**	0	19.6	**779 862 167**
10	856 - 882	**779 864 168**	0	20.0	**779 862 168**
10	882 - 908	**779 864 169**	0	20.4	**779 862 169**
10	904 - 930	**779 864 170**	0	20.8	**779 862 170**
10	936 - 962	**779 864 171**	0	30.6	**779 862 171**
10	961 - 987	**779 864 172**	0	31.2	**779 862 172**
10	984 - 1010	**779 864 173**	0	31.8	**779 862 173**
10	1004 - 1030	**779 864 174**	0	32.3	**779 862 174**
10	1044 - 1070	**779 864 175**	0	33.3	**779 862 175**
10	1076 - 1102	**779 864 176**	0	34.1	**779 862 176**
10	1104 - 1130	**779 864 177**	0	34.8	**779 862 177**
10	1138 - 1177	**779 864 178**	0	39.2	**779 862 178**
10	1192 - 1231	**779 864 179**	0	40.6	**779 862 179**
10	1241 - 1280	**779 864 180**	0	41.8	**779 862 180**
10	1331 - 1370	**779 864 181**	0	44.1	**779 862 181**
10	1413 - 1452	**779 864 182**	0	46.1	**779 862 182**

M	WP (bar)	C max. (mm)	OD min (mm)	OD max. (mm)	OD1 < OD2 (mm)	d (mm)	B (mm)	H (mm)	Torque (N/m)
M16	16	40	756	782	3	824	142	852	60
M16	16	40	782	808	3	850	142	878	60
M16	16	40	806	832	3	874	142	902	60
M16	16	40	828	854	3	896	142	924	60
M16	16	40	856	882	3	924	142	952	60

table continued on the next page

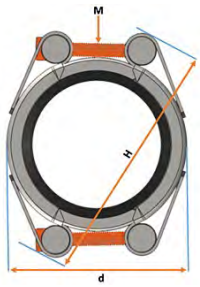

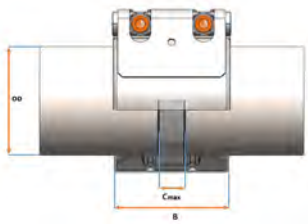

M	WP (bar)	C max. (mm)	OD min (mm)	OD max. (mm)	OD1 < OD2 (mm)	d (mm)	B (mm)	H (mm)	Torque (N/m)
M16	16	40	882	908	3	950	142	978	60
M16	16	40	904	930	3	972	142	1000	60
M16	16	40	936	962	3	1004	146	1032	60
M16	16	40	961	987	3	1029	146	1057	60
M16	16	40	984	1010	3	1052	146	1080	60
M16	16	40	1004	1030	3	1072	146	1100	60
M16	16	40	1044	1070	3	1116	146	1146	80
M16	16	40	1076	1102	3	1148	146	1178	80
M16	16	40	1104	1130	3	1176	146	1206	80
M16	16	40	1138	1177	3	1223	146	1253	80
M16	16	40	1192	1231	3	1277	146	1307	80
M16	16	40	1241	1280	3	1326	146	1356	80
M16	16	40	1331	1370	3	1416	146	1446	80
M16	16	40	1413	1452	3	1498	146	1528	80

UNI-Rep

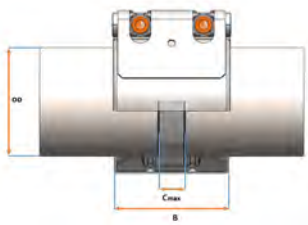

UNI-Rep L PN16

Model:

- Housing, Bars and Strip insert (option): Stainless Steel W5 (1.4571) Quality

Temperature/Pressure:

- Operating temperature EPDM: -30°C to 125°C
- Operating temperature NBR: -20°C to 80°C

Attention:

- **The difference between the different pipe outside diameters OD1<OD2 is 1% or max. 3 mm.**

PN (bar)	OD nominal (mm) (mm)	EPDM Code	SP	Weight (kg)	NBR Code
16	36.0 - 39.0	**779 912 005**	0	0.4	**779 909 005**
16	39.0 - 43.0	**779 912 006**	0	0.4	**779 909 006**
16	43.0 - 47.5	**779 912 007**	0	0.4	**779 909 007**
16	47.5 - 52.5	**779 912 008**	0	0.4	**779 909 008**
16	52.5 - 58.0	**779 912 009**	0	0.6	**779 909 009**
16	58.0 - 64.0	**779 912 010**	0	0.6	**779 909 010**
16	64.0 - 72.0	**779 912 011**	0	1.0	**779 909 011**
16	72.0 - 80.0	**779 912 012**	0	1.0	**779 909 012**
16	80.0 - 88.0	**779 912 013**	0	1.0	**779 909 013**
16	88.0 - 96.0	**779 912 014**	0	1.0	**779 909 014**
16	97.0 - 105.0	**779 912 015**	0	1.1	**779 909 015**
16	104.0 - 112.0	**779 912 016**	0	1.1	**779 909 016**
16	112.0 - 120.0	**779 912 017**	0	1.2	**779 909 017**
16	122.0 - 130.0	**779 912 018**	0	1.2	**779 909 018**
16	129.0 - 137.0	**779 912 019**	0	2.1	**779 909 019**
16	137.0 - 145.0	**779 912 020**	0	2.2	**779 909 020**
16	149.0 - 157.0	**779 912 021**	0	2.3	**779 909 021**
16	157.0 - 165.0	**779 912 022**	0	2.3	**779 909 022**
16	164.0 - 172.0	**779 912 023**	0	2.4	**779 909 023**

M	WP (bar)	C max. (mm)	OD min (mm)	OD max. (mm)	OD1 < OD2 (mm)	d (mm)	B (mm)	H (mm)	Torque (N/m)
M8	60	15	36.0	39.0	2	66	60	104	5.0
M8	50	15	39.0	43.0	2	66	60	104	5.0
M8	50	15	43.0	47.5	2	74	60	112	5.0
M8	50	15	47.5	52.5	2	74	60	112	5.0
M8	50	25	52.5	58.0	2	85	75	125	5.0

table continued on the next page

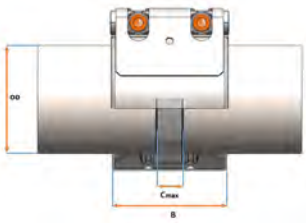

M	WP (bar)	C max. (mm)	OD min (mm)	OD max. (mm)	OD1 < OD2 (mm)	d (mm)	B (mm)	H (mm)	Torque (N/m)
M8	40	25	58.0	64.0	3	85	75	125	5.0
M10	40	30	64.0	72.0	3	108	95	164	10.0
M10	40	30	72.0	80.0	3	108	95	164	10.0
M10	35	30	80.0	88.0	3	124	95	170	10.0
M10	35	30	88.0	96.0	3	124	95	170	10.0
M10	35	30	97.0	105.0	3	141	95	187	10.0
M10	35	30	104.0	112.0	3	141	95	187	10.0
M10	35	30	112.0	120.0	3	158	95	202	12.5
M10	32	30	122.0	130.0	3	158	95	202	12.5
M12	32	40	129.0	137.0	3	178	110	230	20.0
M12	32	40	137.0	145.0	3	186	110	238	25.0
M12	32	40	149.0	157.0	3	197	110	249	30.0
M12	32	40	157.0	165.0	3	205	110	255	30.0
M12	32	40	164.0	172.0	3	212	110	262	30.0

UNI-Rep S2 PN16

Model:

- Housing, Bars and Strip insert (option): Stainless Steel W5 (1.4571) Quality

Temperature/Pressure:

- Operating temperature EPDM: -30°C to 125°C
- Operating temperature NBR: -20°C to 80°C

Option:

- Sealing type Viton (FKM) on request

Attention:

- **The difference between the different pipe outside diameters OD1<OD2 is 1% or max. 3 mm.**

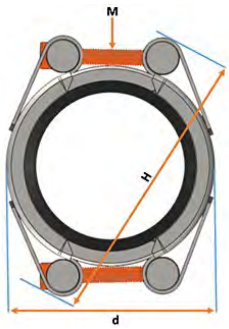

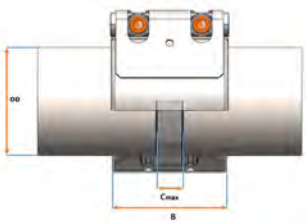

PN (bar)	OD nominal (mm) (mm)	EPDM Code	SP	Weight (kg)	NBR Code
16	172 - 198	**779 964 024**	0	7.8	**779 962 024**
16	197 - 223	**779 964 026**	0	8.1	**779 962 026**
16	221 - 247	**779 964 028**	0	8.4	**779 962 028**
16	250 - 276	**779 964 030**	0	8.7	**779 962 030**
16	275 - 301	**779 964 032**	0	10.8	**779 962 032**
16	302 - 328	**779 964 034**	0	11.3	**779 962 034**
16	327 - 353	**779 964 036**	0	11.7	**779 962 036**
16	348 - 374	**779 964 038**	0	16.1	**779 962 038**
16	374 - 400	**779 964 040**	0	16.8	**779 962 040**
16	399 - 425	**779 964 042**	0	17.4	**779 962 042**
16	425 - 451	**779 964 044**	0	18.0	**779 962 044**
16	447 - 473	**779 964 046**	0	18.6	**779 962 046**
16	475 - 501	**779 964 048**	0	19.3	**779 962 048**
16	490 - 516	**779 964 049**	0	19.7	**779 962 049**
16	507 - 533	**779 964 050**	0	20.1	**779 962 050**
16	558 - 584	**779 964 054**	0	21.4	**779 962 054**
16	533 - 559	**779 964 052**	0	20.7	**779 962 052**
16	587 - 613	**779 964 055**	0	22.1	**779 962 055**
16	615 - 641	**779 964 057**	0	22.8	**779 962 057**
16	635 - 661	**779 964 058**	0	23.3	**779 962 058**
16	663 - 689	**779 964 059**	0	24.0	**779 962 059**
16	687 - 713	**779 964 061**	0	24.6	**779 962 061**
16	704 - 730	**779 964 062**	0	25.0	**779 962 062**
16	719 - 745	**779 964 063**	0	25.4	**779 962 063**

table continued on the next page

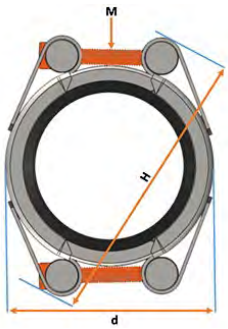

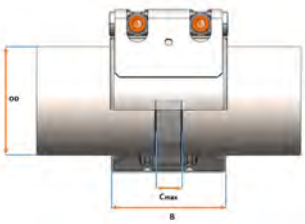

M	WP (bar)	C max. (mm)	OD min (mm)	OD max. (mm)	OD1 < OD2 (mm)	d (mm)	B (mm)	H (mm)	Torque (N/m)
M12	25	40	172	198	3	236	140	262	30
M12	25	40	197	223	3	261	140	287	30
M12	25	40	221	247	3	285	140	311	30
M12	25	40	250	276	3	314	140	340	30
M16	25	40	275	301	3	339	142	365	30
M16	25	40	302	328	3	366	142	392	30
M16	25	40	327	353	3	391	142	417	50
M16	25	40	348	374	3	412	146	438	50
M16	25	40	374	400	3	438	146	464	50
M16	25	40	399	425	3	463	146	489	50
M16	25	40	425	451	3	489	146	515	50
M16	25	40	447	473	3	511	146	537	50
M16	25	40	475	501	3	539	146	565	50
M16	25	40	490	516	3	554	146	580	50
M16	25	40	523	533	3	575	146	603	60
M16	25	40	558	584	3	626	146	654	60
M16	25	40	533	559	3	601	146	629	60
M16	25	40	587	613	3	655	146	683	60
M16	25	40	615	641	3	683	146	711	70
M16	25	40	635	661	3	703	146	731	70
M16	25	40	663	689	3	731	146	759	70
M16	25	40	687	713	3	755	146	783	70
M16	25	40	704	730	3	772	146	800	70
M16	25	40	719	745	3	787	146	815	70

UNI-Rep S2 PN10

Model:

- Housing, Bars and Strip insert (option): Stainless Steel W5 (1.4571) Quality

Temperature/Pressure:

- Operating temperature EPDM: -30°C to 125°C
- Operating temperature NBR: -20°C to 80°C

Option:

- Sealing type Viton (FKM) on request

Attention:

- **The difference between the different pipe outside diameters OD1<OD2 is 1% or max. 3 mm.**

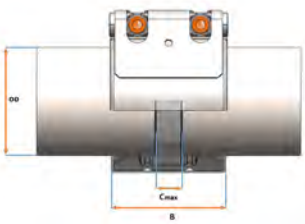

PN (bar)	OD nominal (mm) (mm)	EPDM Code	SP	Weight (kg)	NBR Code
10	172 - 198	**779 964 124**	0	6.4	**779 962 124**
10	197 - 223	**779 964 126**	0	6.6	**779 962 126**
10	221 - 247	**779 964 128**	0	6.8	**779 962 128**
10	250 - 276	**779 964 130**	0	7.0	**779 962 130**
10	275 - 301	**779 964 132**	0	9.0	**779 962 132**
10	302 - 328	**779 964 134**	0	9.4	**779 962 134**
10	327 - 353	**779 964 136**	0	9.7	**779 962 136**
10	348 - 374	**779 964 138**	0	12.0	**779 962 138**
10	374 - 400	**779 964 140**	0	12.4	**779 962 140**
10	399 - 425	**779 964 142**	0	12.8	**779 962 142**
10	425 - 451	**779 964 144**	0	13.2	**779 962 144**
10	447 - 473	**779 964 146**	0	13.6	**779 962 146**
10	475 - 501	**779 964 148**	0	14.1	**779 962 148**
10	490 - 516	**779 964 149**	0	14.3	**779 962 149**
10	507 - 533	**779 964 150**	0	14.6	**779 962 150**
10	533 - 559	**779 964 152**	0	15.0	**779 962 152**
10	558 - 584	**779 964 154**	0	15.4	**779 962 154**
10	587 - 613	**779 964 155**	0	15.9	**779 962 155**
10	615 - 641	**779 964 157**	0	16.3	**779 962 157**
10	635 - 661	**779 964 158**	0	16.6	**779 962 158**

table continued on the next page

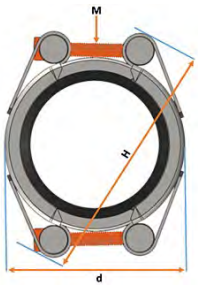

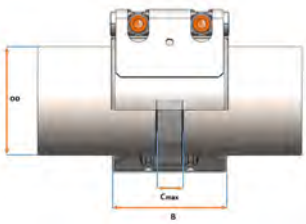

PN (bar)	OD nominal (mm) (mm)	EPDM Code	SP	Weight (kg)	NBR Code
10	663 - 689	**779 964 159**	0	17.1	**779 962 159**
10	687 - 713	**779 964 161**	0	17.5	**779 962 161**
10	704 - 730	**779 964 162**	0	17.7	**779 962 162**
10	719 - 745	**779 964 163**	0	18.0	**779 962 163**

M	WP (bar)	C max. (mm)	OD min (mm)	OD max. (mm)	OD1 < OD2 (mm)	d (mm)	B (mm)	H (mm)	Torque (N/m)
M12	16	40	172	198	3	236	138	262	30
M12	16	40	197	223	3	261	138	287	30
M12	16	40	221	247	3	285	138	311	30
M12	16	40	250	276	3	314	138	340	30
M12	16	40	275	301	3	339	140	365	30
M12	16	40	302	328	3	366	140	392	30
M12	16	40	327	353	3	391	140	417	40
M12	16	40	348	374	3	412	142	438	40
M12	16	40	374	400	3	438	142	464	40
M12	16	40	399	425	3	463	142	489	40
M12	16	40	425	451	3	489	142	515	40
M12	16	40	447	473	3	511	142	537	40
M12	16	40	475	501	3	539	142	565	40
M12	16	40	490	516	3	554	142	580	40
M16	16	40	507	533	3	575	142	603	50
M16	16	40	533	559	3	601	142	629	50
M16	16	40	558	584	3	626	142	654	50
M16	16	40	587	613	3	655	142	683	50
M16	16	40	615	641	3	683	142	711	60
M16	16	40	635	661	3	703	142	731	60
M16	16	40	663	689	3	731	142	759	60
M16	16	40	687	713	3	755	142	783	60
M16	16	40	704	730	3	772	142	800	60
M16	16	40	719	745	3	787	142	815	60

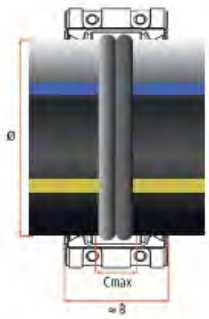

UNI-Rep 5 S2 PN10/16

Model:

- Housing, Bars and Strip insert (option): Stainless Steel W5 (1.4571) Quality

Temperature/Pressure:

- Operating temperature EPDM: -30°C to 125°C
- Operating temperature NBR: -20°C to 80°C

Option:

- Sealing type Viton (FKM) on request

Attention:

- **The difference between the different pipe outside diameters OD1<OD2 is 1% or max. 3 mm.**

OD nominal (mm) (mm)	EPDM Code	SP	Weight (kg)	NBR Code
200	**779 964 064**	0	24.31	**779 962 064**
225	**779 964 065**	0	25.18	**779 962 065**
250	**779 964 066**	0	26.23	**779 962 066**
280	**779 964 067**	0	27.14	**779 962 067**
315	**779 964 068**	0	28.11	**779 962 068**
355	**779 964 069**	0	36.03	**779 962 069**
400	**779 964 070**	0	38.49	**779 962 070**
450	**779 964 071**	0	40.81	**779 962 071**
500	**779 964 072**	0	42.88	**779 962 072**
560	**779 964 073**	0	46.16	**779 962 073**
	779 964 074	0	47.56	**779 962 074**
630	**779 964 075**	0	48.91	**779 962 075**
	779 964 076	0	49.88	**779 962 076**
710	**779 964 077**	0	53.21	**779 962 077**
	779 964 078	0	55.24	**779 962 078**
800	**779 964 079**	0	56.49	**779 962 079**
	779 964 080	0	57.65	**779 962 080**
900	**779 964 081**	0	61.31	**779 962 081**
	779 964 082	0	62.38	**779 962 082**
1000	**779 964 083**	0	95.37	**779 962 083**
	779 964 084	0	99.89	**779 962 084**
1200	**779 964 085**	0	121.70	**779 962 085**

OD nominal (mm) (mm)	M	PN (bar)	WP (bar)	C max. (mm)	OD min (mm)	OD max. (mm)	OD1 < OD2 (mm)	d (mm)	B (mm)	H (mm)
200	M12	16	25	300	197	223	3	287	420	261
225	M12	16	25	300	221	247	3	311	420	285
250	M12	16	25	300	250	276	3	340	420	314
280	M12	10	16	300	275	301	3	365	420	339
315	M12	10	16	300	302	328	3	392	420	366
355	M16	10	16	300	348	374	3	438	420	412
400	M16	10	16	300	399	425	3	489	420	463
450	M16	10	16	300	447	473	3	537	420	511
500	M16	10	16	300	490	516	3	580	420	554
560	M16	10	16	300	558	584	3	654	420	626
	M16	10	16	300	587	613	3	683	420	655
630	M16	10	16	300	615	641	3	711	420	683
	M16	10	16	300	635	661	3	731	420	703
710	M16	10	16	300	704	730	3	800	420	772
	M16	10	16	300	756	782	3	852	420	824
800	M16	10	16	300	782	808	3	878	420	850
	M16	10	16	300	806	832	3	902	420	874
900	M16	10	16	300	882	908	3	978	420	950
	M16	10	16	300	904	930	3	1000	420	972
1000	M16	10	16	300	984	1010	3	1080	420	1052
	M16	10	16	300	1044	1070	3	1146	420	1116
1200	M16	10	16	300	1192	1231	3	1307	420	1277

table continued on the next page

OD nominal (mm) (mm)	Torque (N/m)
200	30
225	30
250	30
280	30
315	30
355	40
400	40
450	40
500	40
560	50
	50
630	60
	60
710	60
	60
800	60
	60
900	60
	60
1000	60
	80
1200	80

Index

Code	Page
108-128L300N	169
108-128L400N	170
108-128L500N	170
118-138L300N	169
118-138L400N	170
118-138L500N	170
133-153L300N	169
133-153L400N	170
133-153L500N	170
143-163L300N	169
143-163L400N	170
143-163L500N	171
160-180L300N	169
160-180L400N	170
160-180L500N	171
180-200L300N	169
180-200L400N	170
180-200L500N	171
190-210L300N	169
190-210L400N	170
190-210L500N	171
200 008 083	140
200 008 084	141
210-230L300N	169
210-230L400N	170
210-230L500N	171
230-250L300N	169
230-250L400N	170
230-250L500N	171
240-260L300N	169
240-260L400N	170
240-260L500N	171
250-270L300N	169
250-270L400N	170
250-270L500N	171
270-290L300N	169
270-290L400N	170
270-290L500N	171
290-310L300N	169
290-310L400N	170
290-310L500N	171
315-335L300N	169
315-335L400N	170
315-335L500N	171
315-335L600N	171
335-355L300N	169
335-355L400N	170
335-355L500N	171
335-355L600N	171
700 618 923	140
700 618 924	140
700 618 925	140
700 618 926	140
700 618 927	140
700 618 928	140
700 618 929	140
700 618 933	140
700 618 934	140
700 618 935	140
700 618 953	139
700 618 954	139
700 618 955	139

Code	Page
700 618 956	139
700 618 957	139
700 618 958	139
700 618 959	139
700 618 960	139
700 618 961	139
700 618 962	139
700 618 963	140
700 618 964	140
700 618 965	140
700 619 010	140
700 619 012	140
709 026 012	136
709 026 016	136
709 026 018	136
709 026 022	136
709 026 026	136
709 026 032	136
709 026 036	136
709 026 038	136
709 026 042	136
709 026 046	136
709 026 048	136
709 026 052	136
709 026 056	136
709 026 062	136
709 026 066	136
709 026 070	136
709 026 072	136
709 026 076	136
709 026 082	136
709 026 086	136
709 026 092	136
709 026 096	136
709 026 102	136
709 026 106	136
709 026 115	136
709 026 116	136
709 026 124	136
709 026 125	136
709 026 126	136
709 026 127	136
709 026 128	136
709 026 129	136
709 026 132	136
709 026 138	136
709 026 139	136
709 026 140	136
709 026 148	136
709 026 149	136
709 026 158	136
709 026 159	136
709 026 168	136
709 026 169	136
709 026 178	136
709 026 179	136
709 026 182	137
709 026 183	137
709 026 184	137
709 026 186	137
709 026 187	137
709 026 188	136

Code	Page
709 026 189	136
709 026 191	137
709 026 192	137
709 026 195	137
709 026 196	137
709 026 198	137
709 026 199	137
709 026 203	135
709 026 206	135
709 026 211	135
709 026 214	135
709 026 217	135
709 026 220	135
709 026 223	135
709 026 227	135
709 026 230	135
709 026 233	135
709 026 236	135
709 026 238	135
709 026 242	135
709 026 245	135
709 026 248	135
709 026 250	135
709 026 254	135
709 026 257	135
709 026 266	135
709 026 269	135
709 026 278	135
709 026 281	135
709 026 284	135
709 026 286	135
709 026 290	135
709 026 293	135
709 026 302	135
709 026 305	135
709 026 308	135
709 026 310	135
709 026 314	135
709 026 317	135
709 026 326	135
709 026 329	135
709 026 332	135
709 026 334	135
709 026 338	135
709 026 340	135
709 026 341	135
709 026 350	135
709 026 353	135
709 026 356	135
709 026 358	136
709 026 362	136
709 026 365	136
709 026 391	135
709 026 392	135
709 026 408	135
709 026 409	135
709 026 410	135
709 026 411	135
709 026 413	135
709 026 414	136
709 026 415	135
709 026 450	137

Code	Page
709 026 451	137
709 026 452	137
709 026 453	137
709 026 455	137
709 026 456	137
709 026 457	137
709 026 458	137
709 026 459	137
709 026 460	137
709 026 465	137
709 026 466	137
709 026 467	137
709 026 468	137
709 026 469	137
709 026 470	137
709 026 472	137
709 026 473	137
709 026 474	137
709 026 475	137
709 026 477	137
709 026 478	137
709 026 479	137
709 026 480	137
709 026 481	137
709 026 482	137
709 026 487	137
709 026 488	137
709 026 489	137
709 026 490	137
709 026 491	137
709 026 492	137
709 301 010	108
709 301 012	108
709 301 014	108
709 301 016	108
709 301 018	108
709 301 020	108
709 301 024	108
709 301 026	108
709 301 028	108
709 301 032	108
709 301 036	108
709 301 040	108
709 301 042	108
709 301 072	108
709 301 073	108
709 301 074	108
709 301 076	108
709 301 078	108
709 301 210	108
709 301 212	108
709 301 214	108
709 301 216	108
709 301 218	108
709 301 220	108
709 301 224	108
709 301 226	108
709 301 228	108
709 301 232	108
709 301 236	108
709 301 240	108
709 301 242	108

Index

Code	Page
709 301 272	108
709 301 273	108
709 301 274	108
709 301 276	108
709 301 278	108
709 301 310	108
709 301 312	108
709 301 314	108
709 301 316	108
709 301 318	108
709 301 320	108
709 301 324	108
709 301 326	108
709 301 328	108
709 301 332	108
709 301 336	108
709 301 340	108
709 301 342	108
709 301 372	108
709 301 373	108
709 301 374	108
709 301 376	108
709 301 378	108
709 301 610	108
709 301 612	108
709 301 614	108
709 301 616	108
709 301 618	108
709 301 620	108
709 301 624	108
709 301 626	108
709 301 628	108
709 301 632	108
709 301 636	108
709 301 640	108
709 301 642	108
709 301 672	108
709 301 673	108
709 301 674	108
709 301 676	108
709 301 678	108
709 305 010	109
709 305 012	109
709 305 014	109
709 305 016	109
709 305 018	109
709 305 020	109
709 305 024	109
709 305 026	109
709 305 028	109
709 305 032	109
709 305 036	109
709 305 040	109
709 305 042	109
709 305 072	109
709 305 073	109
709 305 074	109
709 305 076	109
709 305 078	109
709 305 210	109
709 305 212	109
709 305 214	109

Code	Page
709 305 216	109
709 305 218	109
709 305 220	109
709 305 224	109
709 305 226	109
709 305 228	109
709 305 232	109
709 305 236	109
709 305 240	109
709 305 242	109
709 305 272	109
709 305 273	109
709 305 274	109
709 305 276	109
709 305 278	109
709 305 280	109
709 305 281	109
709 305 282	109
709 305 283	109
709 305 284	109
709 305 310	109
709 305 312	109
709 305 314	109
709 305 316	109
709 305 318	109
709 305 320	109
709 305 324	109
709 305 326	109
709 305 328	109
709 305 332	109
709 305 336	109
709 305 340	109
709 305 342	109
709 305 372	109
709 305 373	109
709 305 374	109
709 305 376	109
709 305 378	109
709 305 610	109
709 305 612	109
709 305 614	109
709 305 616	109
709 305 618	109
709 305 620	109
709 305 624	109
709 305 626	109
709 305 628	109
709 305 632	109
709 305 636	109
709 305 640	109
709 305 642	109
709 305 672	109
709 305 673	109
709 305 674	109
709 305 676	109
709 305 678	109
709 305 680	109
709 305 681	109
709 305 682	109
709 305 683	109
709 305 684	109
709 331 010	132

Code	Page
709 331 016	132
709 331 020	132
709 331 029	132
709 331 210	132
709 331 216	132
709 331 220	132
709 331 229	132
709 331 310	132
709 331 316	132
709 331 320	132
709 331 329	132
709 331 610	132
709 331 616	132
709 331 620	132
709 331 629	132
709 335 010	133
709 335 016	133
709 335 020	133
709 335 029	133
709 335 210	133
709 335 216	133
709 335 220	133
709 335 229	133
709 335 310	133
709 335 316	133
709 335 320	133
709 335 329	133
709 335 610	133
709 335 616	133
709 335 620	133
709 335 629	133
709 341 024	134
709 341 224	134
709 341 324	134
709 341 624	134
709 345 024	134
709 345 224	134
709 345 324	134
709 345 624	134
709 351 010	111
709 351 012	111
709 351 014	111
709 351 016	111
709 351 018	111
709 351 020	111
709 351 024	111
709 351 025	111
709 351 028	111
709 351 029	111
709 351 032	111
709 351 033	111
709 351 036	111
709 351 037	111
709 351 038	111
709 351 039	111
709 351 072	111
709 351 074	111
709 351 076	121
709 351 078	111
709 351 210	111
709 351 212	111
709 351 214	111

Code	Page
709 351 216	111
709 351 218	111
709 351 220	111
709 351 224	111
709 351 225	111
709 351 228	111
709 351 229	111
709 351 232	111
709 351 233	111
709 351 236	111
709 351 237	111
709 351 238	111
709 351 239	111
709 351 272	111
709 351 274	111
709 351 276	121
709 351 278	111
709 351 310	111
709 351 312	111
709 351 314	111
709 351 316	111
709 351 318	111
709 351 320	111
709 351 324	111
709 351 325	111
709 351 328	111
709 351 329	111
709 351 332	111
709 351 333	111
709 351 336	111
709 351 337	111
709 351 338	111
709 351 339	111
709 351 372	111
709 351 374	111
709 351 376	121
709 351 378	111
709 351 610	111
709 351 612	111
709 351 614	111
709 351 616	111
709 351 618	111
709 351 620	111
709 351 624	111
709 351 625	111
709 351 628	111
709 351 629	111
709 351 632	111
709 351 633	111
709 351 636	111
709 351 637	111
709 351 638	111
709 351 639	111
709 351 672	111
709 351 674	111
709 351 676	121
709 351 678	111
709 355 010	112
709 355 011	114
709 355 012	112
709 355 013	114
709 355 014	112

Index

Code	Page
709 355 016	112
709 355 018	112
709 355 020	112
709 355 024	112
709 355 025	112
709 355 028	112
709 355 029	112
709 355 032	112
709 355 033	112
709 355 036	112
709 355 037	112
709 355 038	112
709 355 039	113
709 355 040	114
709 355 042	114
709 355 044	114
709 355 046	114
709 355 048	114
709 355 050	114
709 355 072	113
709 355 074	113
709 355 076	122
709 355 078	113
709 355 210	112, 179
709 355 211	114
709 355 212	112, 179
709 355 213	114
709 355 214	112, 179
709 355 216	112, 179
709 355 218	112
709 355 220	112, 179
709 355 224	112, 179
709 355 225	112
709 355 228	112
709 355 229	112
709 355 232	112
709 355 233	112
709 355 236	112
709 355 237	112
709 355 238	112
709 355 239	113
709 355 240	114
709 355 242	114
709 355 244	114
709 355 246	114
709 355 248	114
709 355 250	114
709 355 272	113
709 355 274	113
709 355 276	122
709 355 278	113
709 355 282	113
709 355 283	113
709 355 310	112
709 355 311	114
709 355 312	112
709 355 313	114
709 355 314	112
709 355 316	112
709 355 318	112
709 355 320	112
709 355 324	112

Code	Page
709 355 325	112
709 355 328	112
709 355 329	112
709 355 332	112
709 355 333	112
709 355 336	112
709 355 337	112
709 355 338	112
709 355 339	113
709 355 340	114
709 355 342	114
709 355 344	114
709 355 346	114
709 355 348	114
709 355 350	114
709 355 372	113
709 355 374	113
709 355 376	122
709 355 378	113
709 355 510	115
709 355 512	115
709 355 514	115
709 355 517	115
709 355 521	115
709 355 526	115
709 355 529	115
709 355 533	115
709 355 610	112
709 355 611	114
709 355 612	112
709 355 613	114
709 355 614	112
709 355 616	112
709 355 618	112
709 355 620	112
709 355 624	112
709 355 625	112
709 355 628	112
709 355 629	112
709 355 632	112
709 355 633	112
709 355 636	112
709 355 637	112
709 355 638	112
709 355 639	113
709 355 640	114
709 355 642	114
709 355 644	114
709 355 646	114
709 355 648	114
709 355 650	114
709 355 672	113
709 355 674	113
709 355 676	122
709 355 678	113
709 355 682	113
709 355 683	113
709 365 009	131
709 365 010	131
709 365 011	131
709 365 012	131
709 365 014	131

Code	Page
709 365 015	131
709 365 016	131
709 365 018	131
709 365 020	131
709 365 024	131
709 365 028	132
709 365 032	132
709 365 209	131
709 365 210	131
709 365 211	131
709 365 212	131
709 365 214	131
709 365 215	131
709 365 216	131
709 365 218	131
709 365 220	131
709 365 224	131
709 365 228	131
709 365 232	131
709 365 309	131
709 365 310	131
709 365 311	131
709 365 312	131
709 365 314	131
709 365 315	131
709 365 316	131
709 365 318	131
709 365 320	131
709 365 324	131
709 365 328	132
709 365 332	132
709 365 609	131
709 365 610	131
709 365 611	131
709 365 612	131
709 365 614	131
709 365 615	131
709 365 616	131
709 365 618	131
709 365 620	131
709 365 624	131
709 365 628	131
709 365 632	131
709 375 010	123
709 375 012	123
709 375 014	123
709 375 016	123
709 375 018	123
709 375 020	123
709 375 024	123
709 375 026	123
709 375 028	123
709 375 032	123
709 375 034	123
709 375 210	123
709 375 212	123
709 375 214	123
709 375 216	123
709 375 218	123
709 375 220	123
709 375 224	123
709 375 226	123

Code	Page
709 375 228	123
709 375 232	123
709 375 234	123
709 375 310	123
709 375 312	123
709 375 314	123
709 375 316	123
709 375 318	123
709 375 320	123
709 375 324	123
709 375 326	123
709 375 328	123
709 375 332	123
709 375 334	123
709 375 610	123
709 375 612	123
709 375 614	123
709 375 616	123
709 375 618	123
709 375 620	123
709 375 624	123
709 375 626	123
709 375 628	123
709 375 632	123
709 375 634	123
709 385 004	126
709 385 005	126
709 385 006	126
709 385 007	126
709 385 008	126
709 385 009	126
709 385 010	126
709 385 011	126
709 385 012	126
709 385 013	126
709 385 014	126
709 385 015	126
709 385 016	126
709 385 017	126
709 385 018	126
709 385 019	126
709 385 020	126
709 385 021	126
709 385 022	126
709 385 023	126
709 385 024	126
709 385 025	126
709 385 026	126
709 385 027	126
709 385 028	126
709 385 029	126
709 385 030	126
709 385 031	126
709 385 032	126
709 385 033	127
709 385 034	127
709 385 035	127
709 385 036	127
709 385 037	127
709 385 038	127
709 385 039	127
709 385 040	127

Index

Code	Page
709 385 041	127
709 385 042	127
709 385 043	127
709 385 044	127
709 385 045	127
709 385 046	127
709 385 047	127
709 385 048	127
709 385 049	127
709 385 050	127
709 385 051	127
709 385 052	127
709 385 053	127
709 385 054	127
709 385 055	127
709 385 056	127
709 385 057	127
709 385 058	127
709 385 204	124
709 385 205	124
709 385 206	124
709 385 207	124
709 385 208	124
709 385 209	124
709 385 210	124
709 385 211	124
709 385 212	124
709 385 213	124
709 385 214	124
709 385 215	124
709 385 216	124
709 385 217	124
709 385 218	124
709 385 219	124
709 385 220	124
709 385 221	124
709 385 222	124
709 385 223	124
709 385 224	124
709 385 225	124
709 385 226	124
709 385 227	124
709 385 228	124
709 385 229	124
709 385 230	124
709 385 231	124
709 385 232	124
709 385 233	124
709 385 234	124
709 385 235	124
709 385 236	124
709 385 237	124
709 385 238	124
709 385 239	124
709 385 240	124
709 385 241	125
709 385 242	125
709 385 243	125
709 385 244	125
709 385 245	125
709 385 246	125
709 385 247	125

Code	Page
709 385 248	125
709 385 249	124
709 385 250	124
709 385 251	124
709 385 252	124
709 385 253	124
709 385 254	125
709 385 255	125
709 385 256	125
709 385 257	125
709 385 258	125
709 385 304	126
709 385 305	126
709 385 306	126
709 385 307	126
709 385 308	126
709 385 309	126
709 385 310	126
709 385 311	126
709 385 312	126
709 385 313	126
709 385 314	126
709 385 315	126
709 385 316	126
709 385 317	126
709 385 318	126
709 385 319	126
709 385 320	126
709 385 321	126
709 385 322	126
709 385 323	126
709 385 324	126
709 385 325	126
709 385 326	126
709 385 327	126
709 385 328	126
709 385 329	126
709 385 330	126
709 385 331	126
709 385 332	126
709 385 333	127
709 385 334	127
709 385 335	127
709 385 336	127
709 385 337	127
709 385 338	127
709 385 339	127
709 385 340	127
709 385 341	127
709 385 342	127
709 385 343	127
709 385 344	127
709 385 345	127
709 385 346	127
709 385 347	127
709 385 348	127
709 385 349	127
709 385 350	127
709 385 351	127
709 385 352	127
709 385 353	127
709 385 354	127

Code	Page
709 385 355	127
709 385 356	127
709 385 357	127
709 385 358	127
709 385 604	124
709 385 605	124
709 385 606	124
709 385 607	124
709 385 608	124
709 385 609	124
709 385 610	124
709 385 611	124
709 385 612	124
709 385 613	124
709 385 614	124
709 385 615	124
709 385 616	124
709 385 617	124
709 385 618	124
709 385 619	124
709 385 620	124
709 385 621	124
709 385 622	124
709 385 623	124
709 385 624	124
709 385 625	124
709 385 626	124
709 385 627	124
709 385 628	124
709 385 629	124
709 385 630	124
709 385 631	124
709 385 632	124
709 385 633	124
709 385 634	124
709 385 635	124
709 385 636	124
709 385 637	124
709 385 638	124
709 385 639	124
709 385 640	124
709 385 641	125
709 385 642	125
709 385 643	125
709 385 644	125
709 385 645	125
709 385 646	125
709 385 647	125
709 385 648	125
709 385 649	124
709 385 650	124
709 385 651	124
709 385 652	124
709 385 653	124
709 385 654	125
709 385 655	125
709 385 656	125
709 385 657	125
709 385 658	125
709 390 030	138
709 390 032	138
709 390 034	138

Code	Page
709 390 036	138
709 390 038	138
709 390 040	138
709 390 043	138
709 390 046	138
709 390 048	138
709 390 053	138
709 390 054	138
709 390 056	138
709 390 078	138
709 390 079	138
709 390 080	138
709 390 081	138
709 390 082	138
709 390 083	138
709 390 130	138
709 390 132	138
709 390 134	138
709 390 136	138
709 390 138	138
709 390 140	138
709 390 143	138
709 390 146	138
709 390 148	138
709 390 153	138
709 390 154	138
709 390 156	138
709 390 178	138
709 390 179	138
709 390 180	138
709 390 181	138
709 390 182	138
709 390 183	138
709 401 018	116
709 401 020	116
709 401 024	116
709 401 032	116
709 401 036	116
709 401 038	116
709 401 048	116
709 401 078	116
709 401 081	116
709 401 082	116
709 401 086	116
709 401 088	116
709 401 089	116
709 401 090	116
709 401 092	116
709 401 093	116
709 401 094	117
709 401 095	117
709 401 096	117
709 401 097	117
709 401 218	116
709 401 220	116
709 401 224	116
709 401 232	116
709 401 236	116
709 401 238	116
709 401 248	116
709 401 278	116
709 401 281	116

Index

Code	Page
709 401 282	116
709 401 286	116
709 401 288	116
709 401 289	116
709 401 290	116
709 401 292	116
709 401 293	116
709 401 294	117
709 401 295	117
709 401 296	117
709 401 297	117
709 401 318	116
709 401 320	116
709 401 324	116
709 401 332	116
709 401 336	116
709 401 338	116
709 401 348	116
709 401 378	116
709 401 381	116
709 401 382	116
709 401 386	116
709 401 388	116
709 401 389	116
709 401 390	116
709 401 392	116
709 401 393	116
709 401 394	117
709 401 395	117
709 401 396	117
709 401 397	117
709 401 618	116
709 401 620	116
709 401 624	116
709 401 632	116
709 401 636	116
709 401 638	116
709 401 648	116
709 401 678	116
709 401 681	116
709 401 682	116
709 401 686	116
709 401 688	116
709 401 689	116
709 401 690	116
709 401 692	116
709 401 693	116
709 401 694	117
709 401 695	117
709 401 696	117
709 401 697	117
709 405 018	118
709 405 020	118
709 405 024	118
709 405 032	118
709 405 036	118
709 405 038	118
709 405 048	118
709 405 078	118
709 405 081	118
709 405 082	118
709 405 086	118

Code	Page
709 405 088	118
709 405 089	118
709 405 090	119
709 405 092	119
709 405 093	119
709 405 094	119
709 405 095	119
709 405 096	119
709 405 097	119
709 405 218	118
709 405 220	118
709 405 224	118
709 405 232	118
709 405 236	118
709 405 238	118
709 405 248	118
709 405 278	118
709 405 281	118
709 405 282	118
709 405 286	118
709 405 288	118
709 405 289	118
709 405 290	119
709 405 292	119
709 405 293	119
709 405 294	119
709 405 295	119
709 405 296	119
709 405 297	119
709 405 298	119
709 405 299	119
709 405 300	119
709 405 318	118
709 405 320	118
709 405 324	118
709 405 332	118
709 405 336	118
709 405 338	118
709 405 348	118
709 405 378	118
709 405 381	118
709 405 382	118
709 405 386	118
709 405 388	118
709 405 389	118
709 405 390	119
709 405 392	119
709 405 393	119
709 405 394	119
709 405 395	119
709 405 396	119
709 405 397	119
709 405 618	118
709 405 620	118
709 405 624	118
709 405 632	118
709 405 636	118
709 405 638	118
709 405 648	118
709 405 678	118
709 405 681	118
709 405 682	118

Code	Page
709 405 686	118
709 405 688	118
709 405 689	118
709 405 690	119
709 405 692	119
709 405 693	119
709 405 694	119
709 405 695	119
709 405 696	119
709 405 697	119
709 405 698	119
709 405 699	119
709 405 700	119
709 451 008	120
709 451 018	120
709 451 024	120
709 451 032	120
709 451 036	120
709 451 038	120
709 451 039	120
709 451 078	120
709 451 079	120
709 451 080	120
709 451 081	120
709 451 084	121
709 451 085	121
709 451 086	120
709 451 087	121
709 451 088	121
709 451 090	121
709 451 092	121
709 451 208	120
709 451 218	120
709 451 224	120
709 451 232	120
709 451 236	120
709 451 238	120
709 451 239	120
709 451 278	120
709 451 279	120
709 451 280	120
709 451 281	120
709 451 284	121
709 451 285	121
709 451 286	120
709 451 287	121
709 451 288	121
709 451 290	121
709 451 292	121
709 451 308	120
709 451 318	120
709 451 324	120
709 451 332	120
709 451 336	120
709 451 338	120
709 451 339	120
709 451 378	120
709 451 379	120
709 451 380	120
709 451 381	120
709 451 384	121
709 451 385	121

Code	Page
709 451 386	120
709 451 387	121
709 451 388	121
709 451 390	121
709 451 392	121
709 451 608	120
709 451 618	120
709 451 624	120
709 451 632	120
709 451 636	120
709 451 638	120
709 451 639	120
709 451 678	120
709 451 679	120
709 451 680	120
709 451 681	120
709 451 684	121
709 451 685	121
709 451 686	120
709 451 687	121
709 451 688	121
709 451 690	121
709 451 692	121
709 455 008	122
709 455 018	122
709 455 024	122
709 455 032	122
709 455 036	122
709 455 038	122
709 455 039	122
709 455 078	122
709 455 079	122
709 455 080	122
709 455 081	122
709 455 084	122
709 455 085	122
709 455 086	122
709 455 087	122
709 455 088	122
709 455 089	114
709 455 090	122
709 455 091	114
709 455 092	122
709 455 094	114
709 455 208	122
709 455 218	122
709 455 224	122
709 455 232	122
709 455 236	122
709 455 238	122
709 455 239	122
709 455 278	122
709 455 279	122
709 455 280	122
709 455 281	122
709 455 284	122
709 455 285	122
709 455 286	122
709 455 287	122
709 455 288	122
709 455 289	114
709 455 290	122

Index

Code	Page
709 455 291	114
709 455 292	122
709 455 294	114
709 455 295	122
709 455 296	122
709 455 297	122
709 455 308	122
709 455 318	122
709 455 324	122
709 455 332	122
709 455 336	122
709 455 338	122
709 455 339	122
709 455 378	122
709 455 379	122
709 455 380	122
709 455 381	122
709 455 384	122
709 455 385	122
709 455 386	122
709 455 387	122
709 455 388	122
709 455 389	114
709 455 390	122
709 455 391	114
709 455 392	122
709 455 394	114
709 455 533	115
709 455 539	115
709 455 559	115
709 455 581	115
709 455 608	122
709 455 618	122
709 455 624	122
709 455 632	122
709 455 636	122
709 455 638	122
709 455 639	122
709 455 678	122
709 455 679	122
709 455 680	122
709 455 681	122
709 455 684	122
709 455 685	122
709 455 686	122
709 455 687	122
709 455 688	122
709 455 689	114
709 455 690	122
709 455 691	114
709 455 692	122
709 455 694	114
709 455 695	122
709 455 696	122
709 455 697	122
709 465 016	131
709 465 017	131
709 465 018	131
709 465 019	131
709 465 020	131
709 465 021	131
709 465 024	132

Code	Page
709 465 028	132
709 465 216	131
709 465 217	131
709 465 218	131
709 465 219	131
709 465 220	131
709 465 221	131
709 465 224	131
709 465 228	131
709 465 316	131
709 465 317	131
709 465 318	131
709 465 319	131
709 465 320	131
709 465 321	131
709 465 324	132
709 465 328	132
709 465 616	131
709 465 617	131
709 465 618	131
709 465 619	131
709 465 620	131
709 465 621	131
709 465 624	131
709 465 628	131
709 471 014	128
709 471 016	128
709 471 020	128
709 471 214	128
709 471 216	128
709 471 220	128
709 471 314	128
709 471 316	128
709 471 320	128
709 471 614	128
709 471 616	128
709 471 620	128
709 475 014	129
709 475 016	129
709 475 020	129
709 475 214	129
709 475 216	129
709 475 220	129
709 475 314	129
709 475 316	129
709 475 320	129
709 475 614	129
709 475 616	129
709 475 620	129
709 495 018	130
709 495 023	130
709 495 030	130
709 495 036	130
709 495 048	130
709 495 061	130
709 495 067	130
709 495 073	130
709 495 218	130
709 495 223	130
709 495 230	130
709 495 236	130
709 495 248	130

Code	Page
709 495 261	130
709 495 267	130
709 495 273	130
709 495 318	130
709 495 323	130
709 495 330	130
709 495 336	130
709 495 348	130
709 495 361	130
709 495 367	130
709 495 373	130
709 495 618	130
709 495 623	130
709 495 630	130
709 495 636	130
709 495 648	130
709 495 661	130
709 495 667	130
709 495 673	130
709 597 230	138
709 597 232	138
709 597 234	138
709 597 236	138
709 597 238	138
709 597 240	138
709 597 243	138
709 597 246	138
709 597 248	138
709 597 253	138
709 597 254	138
709 597 256	138
709 597 258	139
709 597 259	139
709 597 260	139
709 597 261	139
709 597 262	139
709 597 263	139
709 597 264	139
709 597 266	139
709 597 268	139
709 597 272	139
709 597 274	139
709 597 276	139
709 597 278	138
709 597 279	138
709 597 280	138
709 597 281	138
709 597 282	138
709 597 283	138
709 597 284	139
709 597 285	139
709 597 286	139
709 597 287	139
709 597 288	139
709 597 289	139
709 597 290	138
709 597 291	139
709 597 292	139
709 597 293	139
709 597 294	139
709 597 295	139
709 597 296	139

Code	Page
709 597 297	139
709 597 298	139
709 597 299	139
709 597 630	138
709 597 632	138
709 597 634	138
709 597 636	138
709 597 638	138
709 597 640	138
709 597 643	138
709 597 646	138
709 597 648	138
709 597 653	138
709 597 654	138
709 597 656	138
709 597 678	138
709 597 679	138
709 597 680	138
709 597 681	138
709 597 682	138
709 597 683	138
709 597 690	138
709 597 691	139
709 597 692	139
709 597 693	139
709 597 694	139
709 700 000	174
709 700 010	177
709 700 021	177
709 700 023	177
709 700 024	178
709 700 100	177
709 701 260	174, 177
709 701 261	174, 177
709 702 045	177
709 702 046	177
709 702 047	177
709 702 048	177
709 702 050	177
709 702 051	177
709 702 257	174
709 702 258	174
709 702 259	174
709 702 260	174
709 702 261	174
709 706 414	179
709 706 416	176
709 800 006	175, 178
709 810 410	178
709 810 412	178
709 810 414	178
709 810 415	178
709 810 416	178
709 810 420	178
709 810 422	178
709 810 424	178
709 810 425	178
709 810 426	178
709 810 511	174
709 810 512	174
709 810 514	174
709 810 515	174

Index

Code	Page
709 810 516	174
709 810 518	174
709 810 519	174
709 810 520	174
709 810 522	174
709 810 523	175
709 810 524	175
709 810 528	175
709 810 532	175
709 810 612	175
709 810 614	175
709 810 616	175
709 810 618	175
709 810 620	175
709 810 622	175
709 810 624	175
709 810 628	175
709 810 632	175
709 810 711	175
709 810 712	175
709 810 714	175
709 810 716	175
709 810 720	175
709 810 724	175
709 810 728	175
709 810 730	175
709 900 000	140
724 201 061	166
724 201 062	167
724 201 063	167
724 201 073	166
724 201 074	167
724 201 075	167
724 201 076	168
724 201 097	166
724 201 098	167
724 201 099	167
724 201 100	168
724 201 101	168
724 201 102	169
724 201 133	166
724 201 134	167
724 201 135	167
724 201 136	168
724 201 137	168
724 201 138	169
724 201 169	166
724 201 170	167
724 201 171	167
724 201 172	168
724 201 173	168
724 201 174	169
724 201 193	166
724 201 194	167
724 201 195	167
724 201 196	168
724 201 197	168
724 201 198	169
724 201 205	166
724 201 206	167
724 201 207	167
724 201 208	168

Code	Page
724 201 209	168
724 201 210	169
724 201 217	166
724 201 218	167
724 201 219	167
724 201 220	168
724 201 221	168
724 201 222	169
724 201 241	166
724 201 242	167
724 201 243	167
724 201 244	168
724 201 245	168
724 201 246	169
724 201 253	166
724 201 254	167
724 201 255	167
724 201 256	168
724 201 257	168
724 201 258	169
724 208 010	146
724 208 011	147
724 208 012	148
724 208 019	146
724 208 020	147
724 208 021	148
724 208 028	146
724 208 029	147
724 208 030	148
724 208 037	146
724 208 038	147
724 208 039	148
724 208 046	146
724 208 047	147
724 208 048	148
724 208 055	146
724 208 056	147
724 208 057	148
724 208 064	146
724 208 065	147
724 208 066	148
724 208 073	146
724 208 074	147
724 208 075	148
724 208 082	146
724 208 083	147
724 208 084	148
724 208 091	146
724 208 092	147
724 208 093	148
724 208 100	146
724 208 101	147
724 208 102	148
724 208 109	146
724 208 110	147
724 208 111	148
724 208 118	146
724 208 119	147
724 208 120	148
724 208 127	146
724 208 128	147
724 208 129	148

Code	Page
724 208 136	146
724 208 137	147
724 208 138	148
724 208 145	146
724 208 146	147
724 208 147	148
724 208 154	146
724 208 155	147
724 208 156	148
724 208 163	146
724 208 164	147
724 208 165	148
724 208 172	146
724 208 173	147
724 208 174	148
724 208 181	146
724 208 182	147
724 208 183	148
724 208 190	146
724 208 191	147
724 208 192	148
724 208 199	146
724 208 200	147
724 208 201	148
724 208 208	146
724 208 209	147
724 208 210	148
724 208 217	146
724 208 218	147
724 208 219	148
724 208 226	146
724 208 227	147
724 208 228	148
724 208 235	146
724 208 236	147
724 208 237	148
724 208 244	146
724 208 245	147
724 208 246	148
724 208 253	146
724 208 254	147
724 208 255	148
724 208 262	146
724 208 263	147
724 208 264	148
724 208 271	146
724 208 272	147
724 208 273	148
724 208 280	146
724 208 281	147
724 208 282	148
724 208 289	146
724 208 290	147
724 208 291	148
724 208 298	146
724 208 299	147
724 208 300	148
724 208 307	146
724 208 308	147
724 208 309	148
724 209 010	149
724 209 019	149

Code	Page
724 209 028	149
724 209 037	149
724 209 046	149
724 209 055	149
724 209 064	149
724 209 065	149
724 209 073	149
724 209 074	149
724 209 082	149
724 209 083	149
724 209 091	149
724 209 092	149
724 209 100	149
724 209 101	149
724 209 109	149
724 209 110	149
724 209 118	149
724 209 119	149
724 209 127	149
724 209 128	149
724 209 136	149
724 209 137	149
724 209 145	149
724 209 146	149
724 209 147	150
724 209 154	149
724 209 155	149
724 209 156	150
724 209 163	149
724 209 164	149
724 209 165	150
724 209 172	149
724 209 173	150
724 209 174	150
724 209 181	149
724 209 182	150
724 209 183	150
724 209 190	149
724 209 191	150
724 209 192	150
724 209 199	149
724 209 200	150
724 209 201	150
724 209 209	150
724 209 210	150
724 209 218	150
724 209 219	150
724 209 227	150
724 209 228	150
724 209 236	150
724 209 237	150
724 209 245	150
724 209 246	150
724 209 254	150
724 209 255	150
724 209 263	150
724 209 264	150
724 209 272	150
724 209 273	150
724 209 281	150
724 209 282	150
724 209 291	150

Index

Code	Page
724 209 300	150
724 209 309	150
724 209 318	150
724 211 010	151
724 211 011	151
724 211 026	151
724 211 027	151
724 211 042	151
724 211 043	151
724 211 058	151
724 211 059	151
724 211 075	151
724 211 076	152
724 211 091	151
724 211 092	152
724 211 107	151
724 211 108	152
724 211 123	151
724 211 124	152
724 211 139	151
724 211 140	152
724 211 141	153
724 211 142	154
724 211 155	151
724 211 156	152
724 211 157	153
724 211 158	154
724 211 159	155
724 211 171	151
724 211 172	152
724 211 173	153
724 211 174	154
724 211 175	155
724 211 187	151
724 211 188	152
724 211 189	153
724 211 190	154
724 211 191	155
724 211 203	151
724 211 204	152
724 211 205	153
724 211 206	154
724 211 207	155
724 211 219	151
724 211 220	152
724 211 221	153
724 211 222	154
724 211 223	155
724 211 235	151
724 211 236	152
724 211 237	153
724 211 238	154
724 211 239	155
724 211 251	151
724 211 252	152
724 211 253	153
724 211 254	154
724 211 255	155
724 211 267	151
724 211 268	152
724 211 269	153
724 211 270	154

Code	Page
724 211 271	155
724 211 283	151
724 211 284	152
724 211 285	153
724 211 286	154
724 211 287	155
724 211 299	151
724 211 300	152
724 211 301	153
724 211 302	154
724 211 303	155
724 211 315	151
724 211 316	152
724 211 317	153
724 211 318	154
724 211 319	155
724 211 320	156
724 211 331	151
724 211 332	152
724 211 333	153
724 211 334	154
724 211 335	155
724 211 336	156
724 211 347	151
724 211 348	152
724 211 349	153
724 211 350	154
724 211 351	155
724 211 352	156
724 211 363	151
724 211 364	152
724 211 365	153
724 211 366	154
724 211 367	155
724 211 368	156
724 211 379	151
724 211 380	152
724 211 381	153
724 211 382	154
724 211 383	155
724 211 384	156
724 211 395	151
724 211 396	152
724 211 397	153
724 211 398	154
724 211 399	155
724 211 400	156
724 211 411	151
724 211 412	152
724 211 413	153
724 211 414	154
724 211 415	155
724 211 416	156
724 211 427	151
724 211 428	152
724 211 429	153
724 211 430	154
724 211 431	155
724 211 432	156
724 211 443	152
724 211 444	152
724 211 445	153

Code	Page
724 211 446	154
724 211 447	155
724 211 448	156
724 211 459	152
724 211 460	152
724 211 461	153
724 211 462	154
724 211 463	155
724 211 464	156
724 211 475	152
724 211 476	152
724 211 477	153
724 211 478	154
724 211 479	155
724 211 480	156
724 211 491	152
724 211 492	152
724 211 493	153
724 211 494	154
724 211 495	155
724 211 496	156
724 211 508	152
724 211 509	153
724 211 510	154
724 211 511	155
724 211 512	156
724 211 524	152
724 211 525	153
724 211 526	154
724 211 527	155
724 211 528	156
724 211 540	152
724 211 541	153
724 211 542	154
724 211 543	155
724 211 544	156
724 211 556	152
724 211 557	153
724 211 558	154
724 211 559	155
724 211 560	156
724 211 572	152
724 211 573	153
724 211 574	154
724 211 575	155
724 211 576	156
724 211 588	152
724 211 589	153
724 211 590	154
724 211 591	155
724 211 592	156
724 211 604	152
724 211 605	153
724 211 606	154
724 211 607	155
724 211 608	156
724 211 620	152
724 211 621	153
724 211 622	154
724 211 623	155
724 211 624	156
724 211 625	157

Code	Page
724 211 636	152
724 211 637	153
724 211 638	154
724 211 639	155
724 211 640	156
724 211 641	157
724 211 652	152
724 211 653	153
724 211 654	154
724 211 655	155
724 211 656	156
724 211 657	157
724 211 668	152
724 211 669	153
724 211 670	154
724 211 671	155
724 211 672	156
724 211 673	157
724 211 684	152
724 211 685	153
724 211 686	154
724 211 687	155
724 211 688	156
724 211 689	157
724 211 700	152
724 211 701	153
724 211 702	154
724 211 703	155
724 211 704	156
724 211 705	157
724 211 716	152
724 211 717	153
724 211 718	154
724 211 719	155
724 211 720	156
724 211 721	157
724 211 732	153
724 211 733	153
724 211 734	154
724 211 735	155
724 211 736	156
724 211 737	157
724 211 748	153
724 211 749	154
724 211 750	154
724 211 751	155
724 211 752	156
724 211 753	157
724 211 764	153
724 211 765	154
724 211 766	155
724 211 767	155
724 211 768	156
724 211 769	157
724 211 780	153
724 211 781	154
724 211 782	155
724 211 783	156
724 211 784	156
724 211 785	157
724 211 796	153
724 211 797	154

Index

Code	Page
724 211 798	155
724 211 799	156
724 211 800	156
724 211 801	157
724 211 812	153
724 211 813	154
724 211 814	155
724 211 815	156
724 211 816	156
724 211 817	157
724 211 828	153
724 211 829	154
724 211 830	155
724 211 831	156
724 211 832	156
724 211 833	157
724 212 058	157
724 212 059	158
724 212 060	159
724 212 061	159
724 212 062	160
724 212 074	157
724 212 075	158
724 212 076	159
724 212 077	159
724 212 078	160
724 212 090	157
724 212 091	158
724 212 092	159
724 212 093	159
724 212 094	160
724 212 106	157
724 212 107	158
724 212 108	159
724 212 109	159
724 212 110	160
724 212 122	157
724 212 123	158
724 212 124	159
724 212 125	160
724 212 126	160
724 212 138	157
724 212 139	158
724 212 140	159
724 212 141	160
724 212 142	161
724 212 154	157
724 212 155	158
724 212 156	159
724 212 157	160
724 212 158	161
724 212 170	157
724 212 171	158
724 212 172	159
724 212 173	160
724 212 174	161
724 212 186	157
724 212 187	158
724 212 188	159
724 212 189	160
724 212 190	161
724 212 202	157

Code	Page
724 212 203	158
724 212 204	159
724 212 205	160
724 212 206	161
724 212 218	157
724 212 219	158
724 212 220	159
724 212 221	160
724 212 222	161
724 212 234	157
724 212 235	158
724 212 236	159
724 212 237	160
724 212 238	161
724 212 250	157
724 212 251	158
724 212 252	159
724 212 253	160
724 212 254	161
724 212 266	157
724 212 267	158
724 212 268	159
724 212 269	160
724 212 270	161
724 212 282	157
724 212 283	158
724 212 284	159
724 212 285	160
724 212 286	161
724 212 298	158
724 212 299	158
724 212 300	159
724 212 301	160
724 212 302	161
724 212 314	158
724 212 315	158
724 212 316	159
724 212 317	160
724 212 318	161
724 212 330	158
724 212 331	158
724 212 332	159
724 212 333	160
724 212 334	161
724 212 346	158
724 212 347	158
724 212 348	159
724 212 349	160
724 212 350	161
724 212 363	158
724 212 364	159
724 212 365	160
724 212 366	161
724 212 367	161
724 212 379	158
724 212 380	159
724 212 381	160
724 212 382	161
724 212 383	161
724 212 395	158
724 212 396	159
724 212 397	160

Code	Page
724 212 398	161
724 212 399	161
724 212 411	158
724 212 412	159
724 212 413	160
724 212 414	161
724 212 415	161
724 212 428	159
724 212 429	160
724 212 430	161
724 212 431	161
724 212 444	159
724 212 445	160
724 212 446	161
724 212 447	161
724 212 460	159
724 212 461	160
724 212 462	161
724 212 463	162
724 212 476	159
724 212 477	160
724 212 478	161
724 212 479	162
724 212 492	159
724 212 493	160
724 212 494	161
724 212 495	162
724 212 508	159
724 212 509	160
724 212 510	161
724 212 511	162
724 212 524	159
724 212 525	160
724 212 526	161
724 212 527	162
724 212 528	162
724 212 541	160
724 212 542	161
724 212 543	162
724 212 544	162
724 212 557	160
724 212 558	161
724 212 559	162
724 212 560	162
724 212 573	160
724 212 574	161
724 212 575	162
724 212 576	162
724 212 589	160
724 212 590	161
724 212 591	162
724 212 592	162
724 212 605	160
724 212 606	161
724 212 607	162
724 212 608	162
724 212 621	160
724 212 622	161
724 212 623	162
724 212 624	162
724 212 637	160
724 212 638	161

Code	Page
724 212 639	162
724 212 640	162
724 212 653	160
724 212 654	161
724 212 655	162
724 212 656	162
724 212 669	160
724 212 670	161
724 212 671	162
724 212 672	162
724 212 685	160
724 212 686	161
724 212 687	162
724 212 688	162
724 212 701	160
724 212 702	161
724 212 703	162
724 212 704	162
724 212 717	160
724 212 718	161
724 212 719	162
724 212 720	162
724 212 733	160
724 212 734	161
724 212 735	162
724 212 736	162
724 212 749	160
724 212 750	161
724 212 751	162
724 212 752	162
724 212 767	162
724 212 768	162
724 212 783	162
724 212 784	162
724 212 799	162
724 212 800	162
724 212 815	162
724 212 816	162
724 212 831	162
724 212 832	162
724 213 060	163
724 213 061	163
724 213 076	163
724 213 077	163
724 213 092	163
724 213 093	163
724 213 108	163
724 213 109	163
724 213 110	164
724 213 124	163
724 213 125	163
724 213 126	164
724 213 140	163
724 213 141	163
724 213 142	164
724 213 156	163
724 213 157	163
724 213 158	164
724 213 172	163
724 213 173	163
724 213 174	164
724 213 175	164

Index

Code	Page
724 213 188	163
724 213 189	163
724 213 190	164
724 213 191	164
724 213 204	163
724 213 205	163
724 213 206	164
724 213 207	164
724 213 221	163
724 213 222	164
724 213 223	164
724 213 237	163
724 213 238	164
724 213 239	164
724 213 240	165
724 213 253	163
724 213 254	164
724 213 255	164
724 213 256	165
724 213 270	164
724 213 271	164
724 213 272	165
724 213 286	164
724 213 287	164
724 213 288	165
724 213 302	164
724 213 303	164
724 213 304	165
724 213 318	164
724 213 319	164
724 213 320	165
724 213 334	164
724 213 335	164
724 213 336	165
724 213 350	164
724 213 351	164
724 213 352	165
724 213 367	164
724 213 368	165
724 213 383	164
724 213 384	165
724 213 399	164
724 213 400	165
724 213 415	164
724 213 416	165
724 213 431	164
724 213 432	165
724 213 447	164
724 213 448	165
724 213 463	165
724 213 464	165
724 213 479	165
724 213 480	165
724 213 495	165
724 213 496	165
724 213 511	165
724 213 512	165
724 213 527	165
724 213 528	165
724 213 543	165
724 213 544	165
724 213 559	165

Code	Page
724 213 560	165
724 213 575	165
724 213 576	165
724 213 591	165
724 213 592	165
724 213 730	173
724 213 746	173
724 213 762	173
724 213 778	173
724 213 794	173
724 213 810	173
724 213 826	173
724 233 730	173
724 233 746	173
724 233 762	173
724 233 778	173
724 233 794	173
724 233 810	173
779 709 024	185
779 709 025	185
779 709 027	185
779 709 029	185
779 709 030	185
779 709 031	185
779 709 032	185
779 712 024	185
779 712 025	185
779 712 027	185
779 712 029	185
779 712 030	185
779 712 031	185
779 712 032	185
779 721 001	180
779 721 002	180
779 721 003	180
779 721 004	180
779 721 005	180
779 721 006	180
779 721 007	180
779 721 008	180
779 721 009	180
779 721 010	180
779 721 011	180
779 721 012	180
779 721 013	180
779 721 014	180
779 721 015	180
779 721 016	180
779 721 017	180
779 721 018	180
779 721 019	180
779 721 020	180
779 721 021	180
779 721 022	180
779 721 023	180
779 721 411	181
779 721 412	181
779 721 413	181
779 721 414	181
779 721 415	181
779 721 416	181
779 721 417	181

Code	Page
779 721 418	181
779 721 419	181
779 721 420	181
779 721 421	181
779 721 422	181
779 721 423	181
779 721 924	187
779 721 925	187
779 721 926	187
779 721 927	187
779 721 928	187
779 721 929	187
779 721 930	187
779 724 001	180
779 724 002	180
779 724 003	180
779 724 004	180
779 724 005	180
779 724 006	180
779 724 007	180
779 724 008	180
779 724 009	180
779 724 010	180
779 724 011	180
779 724 012	180
779 724 013	180
779 724 014	180
779 724 015	180
779 724 016	180
779 724 017	180
779 724 018	180
779 724 019	180
779 724 020	180
779 724 021	180
779 724 022	180
779 724 023	180
779 724 411	181
779 724 412	181
779 724 413	181
779 724 414	181
779 724 415	181
779 724 416	181
779 724 417	181
779 724 418	181
779 724 419	181
779 724 420	181
779 724 421	181
779 724 422	181
779 724 423	181
779 724 924	187
779 724 925	187
779 724 926	187
779 724 927	187
779 724 928	187
779 724 929	187
779 724 930	187
779 729 006	184
779 729 008	184
779 729 010	184
779 729 012	184
779 729 014	184
779 729 016	184

Code	Page
779 729 018	184
779 729 020	184
779 729 022	184
779 732 006	184
779 732 008	184
779 732 010	184
779 732 012	184
779 732 014	184
779 732 016	184
779 732 018	184
779 732 020	184
779 732 022	184
779 737 006	186
779 737 008	186
779 737 010	186
779 737 012	186
779 737 014	186
779 737 016	186
779 737 017	186
779 737 018	186
779 737 020	186
779 737 022	186
779 737 024	186
779 740 006	186
779 740 008	186
779 740 010	186
779 740 012	186
779 740 014	186
779 740 016	186
779 740 017	186
779 740 018	186
779 740 020	186
779 740 022	186
779 740 024	186
779 762 001	182
779 762 002	182
779 762 003	182
779 762 004	182
779 762 005	182
779 762 006	182
779 762 007	182
779 762 008	182
779 762 009	182
779 762 010	182
779 762 011	182
779 762 012	182
779 762 013	182
779 762 014	182
779 762 015	182
779 762 016	182
779 762 017	182
779 762 018	182
779 762 019	182
779 762 020	182
779 762 021	182
779 762 022	182
779 762 023	182
779 762 024	182
779 762 025	182
779 762 026	182
779 762 027	182
779 762 028	182

Index

Code	Page
779 762 029	182
779 762 030	182
779 762 031	182
779 762 126	183
779 762 127	183
779 762 128	183
779 762 129	183
779 762 130	183
779 762 131	183
779 762 132	183
779 762 133	183
779 762 134	183
779 762 135	183
779 762 136	183
779 762 137	183
779 762 138	183
779 764 001	182
779 764 002	182
779 764 003	182
779 764 004	182
779 764 005	182
779 764 006	182
779 764 007	182
779 764 008	182
779 764 009	182
779 764 010	182
779 764 011	182
779 764 012	182
779 764 013	182
779 764 014	182
779 764 015	182
779 764 016	182
779 764 017	182
779 764 018	182
779 764 019	182
779 764 020	182
779 764 021	182
779 764 022	182
779 764 023	182
779 764 024	182
779 764 025	182
779 764 026	182
779 764 027	182
779 764 028	182
779 764 029	182
779 764 030	182
779 764 031	182
779 764 126	183
779 764 127	183
779 764 128	183
779 764 129	183
779 764 130	183
779 764 131	183
779 764 132	183
779 764 133	183
779 764 134	183
779 764 135	183
779 764 136	183
779 764 137	183
779 764 138	183
779 809 001	188
779 809 002	188
779 809 003	188
779 809 004	188
779 809 005	188
779 809 006	188
779 809 007	188
779 809 008	188
779 809 009	188
779 809 010	188
779 809 011	188
779 809 012	188
779 809 013	188
779 809 014	188
779 809 015	188
779 809 016	188
779 809 017	188
779 809 018	188
779 809 019	188
779 809 020	188
779 809 021	188
779 809 022	188
779 809 023	188
779 812 001	188
779 812 002	188
779 812 003	188
779 812 004	188
779 812 005	188
779 812 006	188
779 812 007	188
779 812 008	188
779 812 009	188
779 812 010	188
779 812 011	188
779 812 012	188
779 812 013	188
779 812 014	188
779 812 015	188
779 812 016	188
779 812 017	188
779 812 018	188
779 812 019	188
779 812 020	188
779 812 021	188
779 812 022	188
779 812 023	188
779 862 024	189
779 862 025	189
779 862 026	189
779 862 027	189
779 862 028	189
779 862 029	189
779 862 030	189
779 862 031	189
779 862 032	189
779 862 033	189
779 862 034	189
779 862 035	189
779 862 036	189
779 862 037	189
779 862 038	189
779 862 039	189
779 862 040	189
779 862 041	189
779 862 042	189
779 862 043	189
779 862 044	189
779 862 045	189
779 862 046	189
779 862 047	189
779 862 048	189
779 862 049	189
779 862 050	190
779 862 051	190
779 862 052	190
779 862 053	190
779 862 054	190
779 862 055	190
779 862 056	190
779 862 057	190
779 862 058	190
779 862 059	190
779 862 060	190
779 862 061	190
779 862 062	190
779 862 063	190
779 862 064	191
779 862 065	191
779 862 066	191
779 862 067	191
779 862 068	191
779 862 069	191
779 862 070	191
779 862 124	191
779 862 125	191
779 862 126	191
779 862 127	191
779 862 128	191
779 862 129	191
779 862 130	191
779 862 131	191
779 862 132	191
779 862 133	191
779 862 134	192
779 862 135	192
779 862 136	192
779 862 137	192
779 862 138	192
779 862 139	192
779 862 140	192
779 862 141	192
779 862 142	192
779 862 143	192
779 862 144	192
779 862 145	192
779 862 146	192
779 862 147	192
779 862 148	192
779 862 149	192
779 862 150	192
779 862 151	192
779 862 152	192
779 862 153	192
779 862 154	192
779 862 155	192
779 862 156	192
779 862 157	192
779 862 158	192
779 862 159	192
779 862 160	192
779 862 161	192
779 862 162	192
779 862 163	192
779 862 164	193
779 862 165	193
779 862 166	193
779 862 167	193
779 862 168	193
779 862 169	193
779 862 170	193
779 862 171	193
779 862 172	193
779 862 173	193
779 862 174	193
779 862 175	193
779 862 176	193
779 862 177	193
779 862 178	193
779 862 179	193
779 862 180	193
779 862 181	193
779 862 182	193
779 864 024	189
779 864 025	189
779 864 026	189
779 864 027	189
779 864 028	189
779 864 029	189
779 864 030	189
779 864 031	189
779 864 032	189
779 864 033	189
779 864 034	189
779 864 035	189
779 864 036	189
779 864 037	189
779 864 038	189
779 864 039	189
779 864 040	189
779 864 041	189
779 864 042	189
779 864 043	189
779 864 044	189
779 864 045	189
779 864 046	189
779 864 047	189
779 864 048	189
779 864 049	189
779 864 050	190
779 864 051	190
779 864 052	190
779 864 053	190
779 864 054	190
779 864 055	190
779 864 056	190
779 864 057	190
779 864 058	190
779 864 059	190

Index

Code	Page
779 864 060	190
779 864 061	190
779 864 062	190
779 864 063	190
779 864 064	191
779 864 065	191
779 864 066	191
779 864 067	191
779 864 068	191
779 864 069	191
779 864 070	191
779 864 124	191
779 864 125	191
779 864 126	191
779 864 127	191
779 864 128	191
779 864 129	191
779 864 130	191
779 864 131	191
779 864 132	191
779 864 133	191
779 864 134	192
779 864 135	192
779 864 136	192
779 864 137	192
779 864 138	192
779 864 139	192
779 864 140	192
779 864 141	192
779 864 142	192
779 864 143	192
779 864 144	192
779 864 145	192
779 864 146	192
779 864 147	192
779 864 148	192
779 864 149	192
779 864 150	192
779 864 151	192
779 864 152	192
779 864 153	192
779 864 154	192
779 864 155	192
779 864 156	192
779 864 157	192
779 864 158	192
779 864 159	192
779 864 160	192
779 864 161	192
779 864 162	192
779 864 163	192
779 864 164	193
779 864 165	193
779 864 166	193
779 864 167	193
779 864 168	193
779 864 169	193
779 864 170	193
779 864 171	193
779 864 172	193
779 864 173	193
779 864 174	193

Code	Page
779 864 175	193
779 864 176	193
779 864 177	193
779 864 178	193
779 864 179	193
779 864 180	193
779 864 181	193
779 864 182	193
779 909 005	194
779 909 006	194
779 909 007	194
779 909 008	194
779 909 009	194
779 909 010	194
779 909 011	194
779 909 012	194
779 909 013	194
779 909 014	194
779 909 015	194
779 909 016	194
779 909 017	194
779 909 018	194
779 909 019	194
779 909 020	194
779 909 021	194
779 909 022	194
779 909 023	194
779 912 005	194
779 912 006	194
779 912 007	194
779 912 008	194
779 912 009	194
779 912 010	194
779 912 011	194
779 912 012	194
779 912 013	194
779 912 014	194
779 912 015	194
779 912 016	194
779 912 017	194
779 912 018	194
779 912 019	194
779 912 020	194
779 912 021	194
779 912 022	194
779 912 023	194
779 962 024	195
779 962 026	195
779 962 028	195
779 962 030	195
779 962 032	195
779 962 034	195
779 962 036	195
779 962 038	195
779 962 040	195
779 962 042	195
779 962 044	195
779 962 046	195
779 962 048	195
779 962 049	195
779 962 050	195
779 962 052	195

Code	Page
779 962 054	195
779 962 055	195
779 962 057	195
779 962 058	195
779 962 059	195
779 962 061	195
779 962 062	195
779 962 063	195
779 962 064	198
779 962 065	198
779 962 066	198
779 962 067	198
779 962 068	198
779 962 069	198
779 962 070	198
779 962 071	198
779 962 072	198
779 962 073	198
779 962 074	198
779 962 075	198
779 962 076	198
779 962 077	198
779 962 078	198
779 962 079	198
779 962 080	198
779 962 081	198
779 962 082	198
779 962 083	198
779 962 084	198
779 962 085	198
779 962 124	196
779 962 126	196
779 962 128	196
779 962 130	196
779 962 132	196
779 962 134	196
779 962 136	196
779 962 138	196
779 962 140	196
779 962 142	196
779 962 144	196
779 962 146	196
779 962 148	196
779 962 149	196
779 962 150	196
779 962 152	196
779 962 154	196
779 962 155	196
779 962 157	196
779 962 158	196
779 962 159	197
779 962 161	197
779 962 162	197
779 962 163	197
779 964 024	195
779 964 026	195
779 964 028	195
779 964 030	195
779 964 032	195
779 964 034	195
779 964 036	195
779 964 038	195

Code	Page
779 964 040	195
779 964 042	195
779 964 044	195
779 964 046	195
779 964 048	195
779 964 049	195
779 964 050	195
779 964 052	195
779 964 054	195
779 964 055	195
779 964 057	195
779 964 058	195
779 964 059	195
779 964 061	195
779 964 062	195
779 964 063	195
779 964 064	198
779 964 065	198
779 964 066	198
779 964 067	198
779 964 068	198
779 964 069	198
779 964 070	198
779 964 071	198
779 964 072	198
779 964 073	198
779 964 074	198
779 964 075	198
779 964 076	198
779 964 077	198
779 964 078	198
779 964 079	198
779 964 080	198
779 964 081	198
779 964 082	198
779 964 083	198
779 964 084	198
779 964 085	198
779 964 124	196
779 964 126	196
779 964 128	196
779 964 130	196
779 964 132	196
779 964 134	196
779 964 136	196
779 964 138	196
779 964 140	196
779 964 142	196
779 964 144	196
779 964 146	196
779 964 148	196
779 964 149	196
779 964 150	196
779 964 152	196
779 964 154	196
779 964 155	196
779 964 157	196
779 964 158	196
779 964 159	197
779 964 161	197
779 964 162	197
779 964 163	197

Index

Code	Page
95-104L300N	169
95-104L400N	170
95-104L500N	170
98-108L300N	169
98-108L400N	170
98-108L500N	170
DN1000C-N	142
DN1000F-N	143
DN1000RC-N	144
DN1000RF-N	145
DN100C-N	142
DN100F-N	143
DN100RC-N	144
DN100RF-N	145
DN1100C-N	142
DN1100F-N	143
DN1100RC-N	144
DN1100RF-N	145
DN1200C-N	142
DN1200F-N	143
DN1200RC-N	144
DN1200RF-N	145
DN1300C-N	142
DN1300F-N	143
DN1300RC-N	144
DN1300RF-N	145
DN1400C-N	142
DN1400F-N	143
DN1400RC-N	144
DN1400RF-N	145
DN1500C-N	142
DN1500F-N	143
DN1500RC-N	144
DN1500RF-N	145
DN1600C-N	142
DN1600F-N	143
DN1600RC-N	144
DN1600RF-N	145
DN1700C-N	142
DN1700F-N	143
DN1700RC-N	144
DN1700RF-N	145
DN1800C-N	142
DN1800F-N	143
DN1800RC-N	144
DN1800RF-N	145
DN1900C-N	142
DN1900F-N	143
DN1900RC-N	144
DN1900RF-N	145
DN2000C-N	142
DN2000F-N	143
DN2000RC-N	144
DN2000RF-N	145
DN200C-N	142
DN200F-N	143
DN200RC-N	144
DN200RF-N	145
DN2100C-N	142
DN2100F-N	143
DN2100RC-N	144
DN2100RF-N	145

Code	Page
DN2200C-N	142
DN2200F-N	143
DN2200RC-N	144
DN2200RF-N	145
DN250C-N	142
DN250F-N	143
DN250RC-N	144
DN250RF-N	145
DN300C-N	142
DN300F-N	143
DN300RC-N	144
DN300RF-N	145
DN350C-N	142
DN350F-N	143
DN350L300N	169
DN350L400N	170
DN350L500N	171
DN350L600N	171
DN350RC-N	144
DN350RF-N	145
DN400C-N	142
DN400F-N	143
DN400L400N	170
DN400L500N	171
DN400L600N	171
DN400L750N	172
DN400RC-N	144
DN400RF-N	145
DN40C-N	142
DN40F-N	143
DN40RC-N	144
DN40RF-N	145
DN450C-N	142
DN450F-N	143
DN450L400N	170
DN450L500N	171
DN450L600N	171
DN450L750N	172
DN450RC-N	144
DN450RF-N	145
DN500C-N	142
DN500F-N	143
DN500L400N	170
DN500L500N	171
DN500L600N	171
DN500L750N	172
DN500RC-N	144
DN500RF-N	145
DN50C-N	142
DN50F-N	143
DN50RC-N	144
DN50RF-N	145
DN550C-N	142
DN550F-N	143
DN550RC-N	144
DN550RF-N	145
DN600C-N	142
DN600F-N	143
DN600L400N	170
DN600L500N	171
DN600L600N	171
DN600L750N	172

Code	Page
DN600RC-N	144
DN600RF-N	145
DN650C-N	142
DN650F-N	143
DN650RC-N	144
DN650RF-N	145
DN65C-N	142
DN65F-N	143
DN65RC-N	144
DN65RF-N	145
DN700C-N	142
DN700F-N	143
DN700L400N	170
DN700L500N	171
DN700L600N	171
DN700L750N	172
DN700RC-N	144
DN700RF-N	145
DN750L500N	171
DN750L600N	171
DN750L750N	172
DN800C-N	142
DN800F-N	143
DN800L500N	171
DN800L600N	171
DN800L750N	172
DN800RC-N	144
DN800RF-N	145
DN80C-N	142
DN80F-N	143
DN80RC-N	144
DN80RF-N	145
DN900C-N	142
DN900F-N	143
DN900RC-N	144
DN900RF-N	145
flangeDN100	172
flangeDN125	172
flangeDN150	172
flangeDN200	172
flangeDN250	172
flangeDN300	172
flangeDN50	172
flangeDN65	172
flangeDN80	172
thread1	166
thread1.1/2	166
thread1.1/4	166
thread1/2	166
thread2	166
thread2.1/2	166
thread3	166
thread3/4	166
thread4	166

GEORG FISCHER WAGA N.V. CONDITIONS OF SALE

Article I – General
1. In case of any difference of opinion regarding the contents, purpose and intention of any provision in these general conditions of sale, the most obvious interpretation, based on the Dutch version thereof, shall prevail. Any reference by principal to his own general conditions in any phase of making the agreement with us, is explicitly rejected. Insofar as our conditions are conflicting with principal's conditions of purchase or tender or other conditions, our conditions shall prevail, except in case that and insofar as principal's conditions have explicitly been accepted by us in writing.
2. In these general conditions the following terms that be understood to mean the following:
"Principal": any natural person or legal entity who purchases products from us or to whom we submit offers.
"We" or "us": contractor who has received an order from principal or has entered into an agreement with the letter or he who refers to these general conditions in his offer.
"Products": all objects which are the subject of an agreement, including all results of services rendered by us, such as contracting work, mounting, installation, advice, etc.

Article II – Offers: creation of agreements
1. All our offers or quotations are free of engagement, unless explicitly stated otherwise in writing. Each offer or quotation from us is based on the assumption that we can carry out the order in normal conditions and during regular working hours. An agreement shall only be created if and insofar as we accept an order from principal in writing or if we commence carrying out an order. The date on which the agreement is created shall be the date of dispatch of our written confirmation of the order respectively the first day on which we actually commence carrying out the order.
2. If at principal's request we make any performance priori to the agreement being created, we shall have the right to demand payment for such performance in conformity with the rates then applied by us, unless explicitly otherwise agreed upon in writing.
3. In case of acceptance by us in writing, we shall have no further obligations than those accepted by us in writing. Principal shall be deemed to be bound by his order, for as long as the order has not been refused by us.
4. Stipulations in the order which are additional to or deviating from our offer or quotation shall at all times only be binding for us if and insofar as such stipulations have been explicitly accepted by us in writing.
5. All specifications or figures, measurements, weights and/or other descriptions of the products have been drawn up with due care, but we cannot guarantee that no deviations will occur. Samples, drawings or models, etc. shown or provided shall at all times only be indications of the relevant products.

Article III – Prices
1. Unless explicitly otherwise agreed upon in writing, our prices shall be ex works, which means excluding transport and/or forwarding, packaging, insurance, etc. and excluding duties and taxes and other levies, if any, imposed by the public authorities as well as any costs related to objects made available by principal in the scope of the execution of the order. If delivery free domicile has been agreed upon, expenses involved in special or express transport shall nevertheless be charged to principal separately.
In addition, we shall have the right to charge a small-order surcharge to principal in case of small deliveries.
2. In case that the prices of materials, equipment, components, raw materials, wages, salaries, social security contributions and levies imposed by the public authorities are increased after the date when the agreement was created in conformity with article II clause 1 and before the order has been fully executed, we shall have the right to increase our prices accordingly.
3. We shall have the right to invoice additional work carried out by us separately, also when the additional work has not been ordered in writing and/or the price thereof has not been agreed upon in advance. For calculating the price for additional work, the provisions in the preceding clauses of this article shall be analogously applicable. Applicability of 7a: 1646 Dutch Civil Code is explicitly excluded.
4. If mounting or installation of products delivered is explicitly included in our confirmation of the order and is therefore part of the agreement entered into with principal, the price referred to in this article shall have been calculated so as to include mounting or installation of the products and completing the products ready for operation at the location specified in the agreement. The costs and financial consequences of obligations of principal referred to separately in article VI shall not be included in this price, except if and insofar as they have been explicitly included in our confirmation of the order.

Article IV – Packaging
Unless explicitly agreed upon otherwise in writing, the products shall be provided with a type of packaging – if necessary and at our exclusive discretion – in which they are customarily sold, duly observing the provision in article III clause 1. Unless otherwise agreed upon in writing with principal, we shall not take back the packaging materials.

Article V – Documents, appliances and advice
1. Cost estimates, plans, drawings, statements of measurements and weights or other documents as well as appliances such as models, moulds, stamps, dies and tools pertaining to offers or deliveries drawn up, manufactured or made available shall remain our property at all times – also if the cost of manufacturing has been charged to principal – and shall be returned to us at our first request.
2. Except when we have given our consent in writing, principal undertakes that the documents, appliances and information provided by us as referred to in the preceding clause shall not be copied or imitated or made available for inspection to or put at the disposal of third parties, whether fore reusing them or not. We shall have the right to demand from principal that he gives his cooperation to signing a declaration of secrecy submitted to him by us.
3. Duly observing the provision in article II, clause 5, we shall only be bound by any advice, calculation, information and specification provided by us regarding capacities, results and/or performance to be expected of products to be supplied by us or operations to be carried out by us, if and insofar as such particulars have been included in our written confirmation of the order or from part of the written agreement entered into separately by us and principal.

Article VI – Mounting; installation
1. Principal shall ensure that necessary facilities, provisions and conditions for the mounting or installation operations to be carried out by us have been or are complied with timely and properly. Such facilities and other activities to be conducted in this scope shall be for the account and at the risk of principal at all times.
2. Principal shall ensure for his account and at his risk that our engineers are enabled to carry out their operations. He provides the appliances required, duly observing necessary safety regulations and other precautions and gives the assistance required, either personally or by helpers made available by him. Principal shall ensure that suitable accommodation and other personal facilities are available to our engineers.
3. Travelling expenses shall be charged to principal separately. In deviation from the provision in article III, clause 4, we reserve the right to charge additional labour costs in case that in our opinion, in deviation from the assumption referred to in article II, clause 1, we are necessitated to carry out the operations outside regular working hours and/or in special conditions.
4. The provision in article VII regarding the period of delivery is analogously applicable to the mounting or installation period agreed upon. A period during which machineries, installations, etc. are running in is not included in the mounting or installation period agreed upon with us.
5. Duly observing the provisions in this article, that which has been provided in the relevant articles of these conditions shall be applicable to price, delivery, risk and warranty in respect of mounting or installation.

Article VII – Period of delivery
1. The period of delivery, which is also understood to be the period for the operations to be carried out by us, shall commence on the day stated in our written confirmation of the order. If certain details, drawings, etc. are needed or certain formalities are required to be fulfilled for the execution of the order, the period of delivery shall commence on a later date, being the date on which all details, drawings, etc. are in our possession or the date on which the formalities required have been fulfilled. In case that an advance payment is demanded by us when the order is placed, the period of delivery shall commence on a later date that the date of the written acceptance of the order or the date of receipt of said documents, this later date being the date on which we receive said payment.
2. Periods of delivery stated by us shall not constitute a deadline and are always free of engagement. Solely expiration thereof does not result in our being in default. We shall make every effort to observe the periods of delivery stated as exactly as possible. Except for willfulness or gross negligence, our exceeding the period of delivery does not give principal the right to demand compensation, to refuse to take receipt of the product or to full or partial rescission of the agreement.

Article VIII – Force majeure
1. Force majeure on our part shall be understood to mean: any circumstance independent from our will due to which fulfillment of our obligations to principal is fully or partly prevented or due to which fulfillment of our obligations cannot be demanded from us in reason, irrespective of whether this circumstance was foreseeable at the time when the agreement was entered into. We shall notify principal of a situation constituting force majeure as soon as possible.
2. In any case all situations constituting force majeure, such as war, threat of war, civil war, riot, taking of hostages, war risk, fire, damage caused by water and flooding, strike, occupation of the company, lock-out, lack of labour or raw materials, defects in machines or installations, disruptions in energy supply, all and any both in our company and in that of third parties from whom we have to buy all or part of the materials or raw materials, as well as during storage or transport, whether executed by ourselves or not, and furthermore due to all other causes that have arisen for which we cannot be blamed or which have arisen through no action of ours, shall relieve us from any obligation to fulfill our obligations, including the period of delivery, for as long as the situation preventing us from doing so continues to exist. Claims for compensation due to partial or total non-fulfillment shall also be excluded in the above mentioned cases.
3. When the situation constituting force majeure has continued for two months, we shall have the right to rescind the agreement in part of in full. In such case principal shall not be entitled to any compensation.

Article IX – Delivery
When the relevant products have left our factory or when we have notified principal in writing that the products are ready to be dispatched, they shall be deemed to have been delivered, without prejudice to the provision in article XI and irrespective of our obligation, if any, to fulfill mounting and/or installation obligations. Consequently, the place of delivery is our factory, even if delivery free domicile and/or free transport has been agreed upon by us. In case that the order is delivered in parts, the separate batches as such shall be deemed to have been delivered.

Article X – Risk
1. The risk shall be transferred to principal at the time of delivery in the sense of article IX. In case of damage to products caused by destruction of the packaging, too, the provision in the preceding sentence shall be in full force and effect.
2. If the products are not, not timely or not properly taken by principal, principal shall be in default without any notice of default being required. We shall then have the right to store the products for the account and at the risk of principal or to sell them to a third party. The selling price, increased by the interest and alls expenses, shall remain payable by principal; however, as the case arises, the net proceeds of the sale to a third party shall be deducted.
3. Unless otherwise agreed upon with principal in writing, dispatch and/or transport of the products, if such operations are arranged by us, shall be for the account and at the risk of principal and the products shall not be insured against transport risks by us. Even if we have given a declaration to the carrier that any damage during transport shall be for our account, transport risks shall nevertheless be for the account of principal and we are not obliged to take steps to recover any damage. If desired, we may transfer our rights in respect of the carrier to principal.
4. Except in case that such has been explicitly otherwise agreed upon in writing, products which have been provided to us for treatment, repair or inspection shall be held by us at the risk of principal. We undertake to hold and treat the products provided to us by principal with due care.

Article XI – Reservation of ownership
1. The ownership of the products shall only be transferred to principal when he has fulfilled all obligations ensuing from the relevant agreement or from any agreement related thereto. Obligations shall be understood to include, in addition to payment of the purchase price, the operations conducted or to be conducted in respect of the products as well as payment of all surcharges, interest rates, taxes and costs, etc. in respect thereof pursuant to the agreement.
2. It shall not be permitted to principal to alienate, raise a loan on or pledge the products or contribute the products to a mortgage or to transfer the products to third parties in any other manner. It shall be permitted to principal to treat, process or use the products in the scope of his normal business operations.
3. Principal shall immediately enable us to take back the products, without any notice of default or legal intervention being required. Without prejudice to the other rights to which we are entitled, we are irrevocably authorized by principal now, in case the occasion arises, to dismount and take into our possession the products supplied by us and fixed to movable or immovable objects, in the event that principal does not, not timely or not properly fulfill his (financial) obligations contracted to us, without any notice of default of legal intervention being required.
4. Principal shall be obliged to notify us in writing without delay of the fact that third parties (possibly) exercise rights on the products on which our reservation of ownership is resting. In the event that principal appears not to have complied with this obligation, he shall forfeit a penalty of 15% of the unpaid part of the amounts payable by him to which the reservation of ownership is applicable, without prejudice to the other rights in respect of said amounts payable by him to which we are entitled.
5. Each payment we receive from principal shall in the first instance serve as payment of amounts receivable by us from principal regarding which a reservation of ownership in the sense of clause 1 of this article is not applicable (any longer).

Article XII – Credit surcharge
The invoice amount may be increased by us by a credit surcharge which is stated separately on the invoice. When the invoice amount is paid within thirty days from the invoice date, said surcharge does not have to be included in the payment.

Article XIII – Payment
1. Unless otherwise agreed upon in writing, payment of the purchase price and/or the price agreed upon for operations to be carried out or carried out by us shall be made, at our discretion, either cash on delivery or within thirty days from the date of delivery in accordance with the provision in article IX. All payments shall be made without any deduction of discount or of amounts receivable from us. In case that principal holds the view that he may have any claims, in whatever form, in respect of the delivery or the execution of the order, this shall not relieve him from the obligation to pay in the manner agreed upon and he shall not have the right to defer his obligation to pay.
2. Payment of additional work shall be effected as soon as we have invoiced such work to principal.
3. We shall have the right, if at any time we entertain reasonable doubts about principal's creditworthiness, to demand, before proceeding with (any further) performance, full or partial prepayment of the purchase price or that principal gives adequate security, for example by means of a bank guarantee or secret pledging of products supplied by us. In such case we shall also have the right to dispatch products exclusively subject to the condition cash on delivery.
4. In case that we have agreed with principal that payment shall be effected through a bank or when security is given by means of documentary credit or bank guarantees, principal undertakes that such transaction shall take place through a first-class bank at all times. If we hold reasonable doubts about said qualification, we shall have the right to reject the bank proposed and to designate another bank.
5. Solely due to any term of payment having expired, principal shall be in default by the operation of the law. In that case all amounts payable by principal to us shall fall fully and immediately due, without prejudice to the other rights to which we are entitled.
6. On all amounts which have not been paid on the last day of the term of payment at the latest, interest shall be payable by principal, without any notice of default being required, as from that day, equal to the legal interest rate then applicable in The Netherlands increased by a 2% surcharge. Every time, after expiration of a year the amount on which interest is charged is increased by the interest payable for that year. If principal has not paid the amount and interest payable after expiration of another term of payment stated in writing, principal shall be obliged to compensate us for all expenses incurred in and out of court, which are determined at 15% minimum of the outstanding amount payable and will amount to € 250,- minimum, excluding VAT, at all times.
7. We shall have the right to keep in our possession objects of principal which have been put at our disposal in connection with the order granted to us and to defer returning such objects until principal has fulfilled all his financial obligations to us.

Article XIV – Rescission
1. In case that principal does not, not timely, or not properly fulfill any of his obligations ensuing from the agreement entered into with us, he shall be in default and we shall have the right, without any notice of default or legal intervention being required:
- to suspend performance of the agreement and the agreements directly related thereto until adequate security has been given for payment; and/or
- to rescind full or partly the agreement and the agreements directly related thereto;
all and any without prejudice to the other rights to which we are entitled and without our being obliged to give any compensation.
2. In case of bankruptcy or a moratorium of principal's business or his business being shut down or liquidated, all agreements with principal shall be rescinded by the operation of the law, unless we notify principal within a reasonable period that we wish (part of) the relevant agreement(s) to be performed, in which case we shall have the right, without any notice of default being required:
- to suspend performance of the relevant agreements until adequate security has been given for payment; and/or
- to suspend all our financial obligations, if any, on whatever account to principal;
all and any without prejudice to the other rights to which we are entitled and without our being obliged to give any compensation.
3. If an event occurs as referred to in clause 1 or clause 2 of this article, all amounts payable by principal to us shall fall immediately and fully due and we shall have the right to take back the products involved. In that case we shall have the right to enter the sites and buildings of principal for the purpose of taking the products into our possession. Principal shall be obliged to take measures required for providing the opportunity to us to exercise our rights.

Article XV – Cancellation
1. If principal wishes to cancel the order placed with us and we have agreed thereto in writing, principal shall be obliged – except for a written agreement reading otherwise – to take over from us the materials and raw materials bought by us, whether on the basis of a forward contract or not, whether treated or processed or not, at the price paid by us, including labour costs, and to compensate us for such losses as loss of profit by paying 15% of the price agreed upon; all and any without prejudice to any other rights to which we are entitled. In case that we have entered into a currency ensuing from the cancellation.
2. Principal shall be obliged at all times to indemnify us against claims of third parties ensuing from the cancellation of the order.

Article XVI – Inspection and complaints
1. Principal shall be obliged to inspect the products or cause the products to be inspected carefully immediately after their arrival at the place of destination or after completion of the operations carried out by us or – if this happens earlier – after receipt by himself or by a third party acting on his instructions. Any complaints about defects to the products owing to defects in materials or manufacture, as well as deviations as regards quantity, weight, composition or quality between the products delivered and the description previously provided in the confirmation of the order and/or the invoices, shall be notified to us in writing within fourteen days from the date of arrival of the products or completion of the operations, without prejudice to the provision in clause 3 of this article. However, if a test or inspection has been conducted at our factory, complaints shall be submitted during such test or inspection and confirmed in writing.
2. Any defects which in reason cannot be established within the period stipulated hereinbefore shall be notified to us in writing immediately when they have been established but within the applicable warranty period at the latest. Complaints about invoices shall exclusively be submitted in writing within fourteen days from the date of receipt of the invoices, the date of receipt being determined as being the day following the date of the relevant invoice.
3. Slight deviations with the customary tolerances shall not constitute any grounds fro principal to complain, apply for compensation or request cancellation of the order.
4. If complaints are not submitted within the periods stipulated in this article, any claim of principal pertaining to such defects shall be null and void.
5. When principal discovers any defect, he shall be obliged to discontinue the application, treatment, processing or installation of the relevant products immediately and he shall give his full cooperation required by us for investigating the complaint, which includes giving us the opportunity to conduct an on-site investigation into the conditions of treatment, processing, installation and/or application or cause such investigation to be conducted.
6. Principal shall not have the right to complain about products in respect of which we cannot verify the complaint. Principal shall not be free to return the products before we have agreed thereto in writing.

Article XVII – Warranty
1. We grant warranty on defects in materials and manufacture for twelve months from delivery by principal to end user, however, for eighteen months maximum from delivery in the sense of article IX. Our warranty comprises our repairing the defects at our expense or – at our exclusive discretion – taking back the relevant products fully or partly and replacing them by new products. If we replace (components of) products supplied so as to fulfill our warranty obligations, the replaced (components of) products shall become our property.
All expenses exceeding the obligation referred to hereinbefore in this article shall be for the account of principal, such expenses including carriage, travelling expenses and costs of dismounting and mounting. In case that we carry out repairs to products supplied to fulfill our warranty obligations, the relevant products shall fully remain at the risk of principal.
2. Our warranty shall not be effective:
A. if the defects have resulted from injudicious application or from causes other than defective materials or manufacture;
B. if we deliver used materials or used products in accordance with the order;
C. if the cause of the defects cannot be clearly demonstrated;
D. if not all instructions provided for using the products and other specifically applicable warranty instructions have been complied with strictly and fully.
3. If products are provided for treatment, repair, etc. warranty shall only be granted for the good quality of the execution of the treatments ordered. On components which we do not manufacture ourselves, warranty shall be restricted to the warranty granted to us by our suppliers.
If we have undertaken to mount or install the products, our warranty obligation in respect thereof shall only be applicable in case of defective mounting or installation. In such case the warranty granted by us shall commence on the day when mounting or installation has been completed by us in our opinion, on the understanding that in that case the warranty period shall expire in any case nine months from delivery in the sense of article IX.
4. Our warranty shall be null and void if:
A. the relevant defects are the result or regulations issued by public authorities related to the quality or the nature of the materials used or to manufacture;
B. principal makes modifications and/or repairs to the products supplied, or causes modifications and/or repairs to be made, at his own initiative during the warranty period;
C. principal does not, not timely or not properly fulfill any obligation ensuing from this agreement or any other agreement related thereto, such as the obligations regarding inspection and complaints stipulated in these conditions.
5. Unless explicitly otherwise agreed upon, we shall be exclusively obliged to comply with the warranty obligations stipulated in this article within The Netherlands.

Article XVIII – Liability
1. Our liability shall be limited to complying with the warranty obligation described in article XVII.
2. Except in case of our own willfulness or gross negligence and except for our warranty obligations, we shall at no time be liable for any damage suffered by principal, including consequential damage, emotional injury, loss or profits or damage to the environment or damage resulting from liability to third parties.
3. In the event that and insofar as we are still held liable in any case by the competent court, despite the provision in clauses 1 and 2 of this article, our liability to principal on whatever account shall be limited for each event (in which a related series of events shall be considered to be one event) in all cases to the size of the relevant contract price excluding VAT.
4. Principal shall be obliged to indemnify us and compensate us for all expenses, losses and interests which might have arisen for us as a direct consequence of claims of third parties on us in respect of events, acts or omissions during or in the scope of the execution of the order for which, pursuant to these conditions, we are not liable to principal.
5. We shall not be liable for violation of any patents, licenses or other rights of third parties by using information which has been made available to us by or on behalf of principal for the execution of the order. If in the written agreement entered into with principal or in our confirmation of the order we refer to technical, safety, quality and/or other regulations pertaining to the products, principal shall be deemed to be acquainted with such regulations, unless he notifies us of the contrary without delay. We shall then give him further information on said regulations. Principal undertakes to inform his customers in writing of said regulations at all times.

Article XIX – Applicable law; competent court
1. Dutch law shall be applicable to all agreements entered into with us, of which these conditions are a part, either in full or in part. Parties shall be deemed to elect domicile at the place where we are established.
2. Any disputes arising from agreements entered into with us or these general conditions shall be subjected, insofar as not laid down otherwise by the law, to the decision of the competent court whose jurisdiction includes the place where we are established, unless explicitly otherwise agreed upon by parties.
3. The applicability of the Viennese Contract of Sale is excluded, unless parties have explicitly otherwise agreed upon.

Article XX – Filing
These General Terms and Conditions are filed at the Chamber of Commerce at Oost Nederland at Enschede dated 1 January 1994 under no. 080 58749.

Article XXI – Registration
Georg Fischer Waga N.V. +GF+ has been registered under the Business Names Act with the Chamber of Commerce at Oost Nederland at Enschede under no. 080 58749.

Georg Fischer Waga N.V.

Contact information

P.O. Box 290
8160 AG EPE
The Netherlands
T +31 578 678378
F +31 578 620848
www.waga.nl
waga.ps@georgfischer.com

The technical data are not binding and not expressly warranted characteristics of the goods. They are subject to change. Please consult our General Conditions of Supply.

Product catalogue 2021/EN
© Georg Fischer Waga N.V.